A Assembly instructions
Bird's nest tree (EU-GSM)
Art. 4652

Attention! Only use the **assembly instructions included in the scope of delivery** for the assembly, installation and maintenance of the respective equipment!

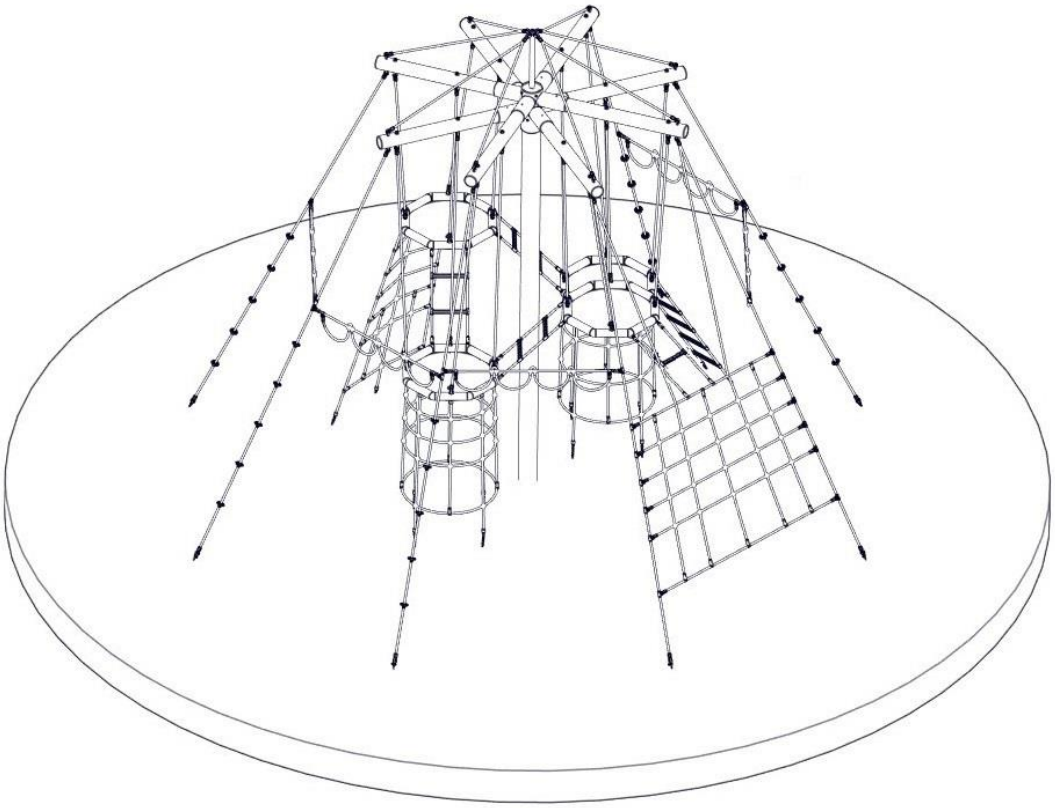

Revision history
Revision 0 – 2006-02-13
The first allowed version
Assembly instruction
Revision 236 -2025-03-05 FH
Datenblatt Maße geändert u. Draufsicht
All rights reserver
© Copyright 2006 Huck Seiltechnik GmbH

Contents

A Assembly instructions Bird's nest tree (EU-GSM) Art. 4652 1
1 Introduction Assembling 4
2 Datasheet Bird's nest tree, article 4652 6
3 Delivery contents (parts list with part numbers) 8
4 Abbreviations 11
5 Assembly instructions 14
6 Post installation checks 26
B Maintenance instructions Bird's nest tree (EU-GSM) Art. 4652 27
7 Introduction Maintenance 29
8 General maintenance information 30
9 Maintenance timetable 32
10 Regular maintenance 33
11 Monthly maintenance 35
12 Quarterly maintenance 35
13 Half yearly maintenance 36
14 Annual maintenance 36
15 Maintenance printout 37
16 Hand over document 39

List of Tables

Table 3-1: Delivery contents, in words 8
Table 3-2: Delivery contents, in symbols 9

1 Introduction Assembling

1.1 General information

This equipment should be installed, inspected, maintained and operated in accordance with EN1176-7 guidelines.

Before installation work commences, please check that you have all of the equipment and fixation components in the parts list provided (see Tables 3-1 and 3-2).
Please consider that the installation has to be carried out only on even terrain (max.slope up to 3%).

Any spare parts that may be required can be obtained directly from your supplier.

Please do not hesitate to call your supplier if you have any problems during installation or in case of any other questions.

Following installation, complete assembly instructions, maintenance instructions and a maintenance record must be sent to the operator who must confirm receipt in writing. See the last page of this document.

All nuts and bolts are hot-dip galvanised or stainless steel.

One of the characteristics of stainless steel is that uncontrolled cold-welding may occur when the nuts are tightened. To prevent this, it is necessary to spray the nuts and bolts with Teflon spray or another similar lubricant.

We hereby confirm that this play equipment has been tested and certified in accordance with the play equipment standard EN 1176.

Drawings / Views

All optical drawings are showing only the measurements/dimensions and are no mandatory technical views of the complete item.

We reserve the right to change technical details of our articles which are serving for the further development of our articles and are reasonable for the customer.

Measurement tolerances

Because of the properties and characteristics of the components, minor measurement tolerances compared to the indication on the sketches are possible.

This concerns all shown measurements except the foundation measurements resp. measurements below upper edge ground level/play area.

2 Datasheet Bird's nest tree, article 4652

1. Equipment space: Ø 7,70 m
   safety zone: Ø 10,20 m
   height of fall: 2,80 m
   height of equipment: 6,00 mm
   Fall protection area: 81 m²

2. Required safety surface:

Surface material	Description mm	Minimum thickness of layer mm	Maximum height of fall mm
Topsoil grass			<= 1000*
Chipped bark	20 – 80 grain size	400	<= 3000
Wood chippings	5 – 30 grain size	400	<= 3000
Sand	0.2 – 2 grain size	400	<= 3000
Gravel	2 – 8 grain size	400	<= 3000
Other ground materials	As recommended by manufacturer		

3. Name and overall dimension of the largest component:
   Steel post (1 item) length 6.20 m, ø 193.7 mm

4. Name and weight of the heaviest component:
   1 pallet steel post (1 piece) approx. 157 kg

5. Intended age group: 6 years and over

6. **Please note that this equipment is set in concrete.**

   Concrete: C25/30
   Required concrete: 3.2 m^3
   Foundations / area to be excavated:
   Top edge of concrete 40 cm below ground level (see page 10 and 11)

   13 x 0.40 m long x 0.40 m wide, total depth 1.00 m including 10 cm drainage
   1 x 2.00 m long x 0.40 m wide, total depth 1.00 m including 10 cm drainage
   1 x 0.40 m long x 0.58 m wide, total depth 1.00 m including 10 cm drainage
   1 x 1.20 m long x 1.20 m wide, total depth 1.30 m including 10 cm drainage

Attention! **Round off foundation edges (min.R = 100 mm)! Sizes of fundations are “4-5” (natural ground).**
Soil class 4: soft to medium plasticity, interleave bound, with minor portion of stone (portion < 30% with bigger diameter of 63 mm grain size).
Soil class 5 : ground with soil class 3 and 4 with big portion of stones (portion > 30% with bigger diameter of 63 mm grain size).
In case of sandy and soft soils, the surface measure of foundations have to be enlarged for about 50%!

7. Assembly time, once foundations complete: 20 hours.
   Required assistance: 3 people.

8. Any spare parts which may be required can be obtained directly from your supplier

9. **We hereby confirm that this item of play equipment has been tested and certified in accordance with the play equipment standard EN 1176.**

3 Delivery contents (parts list with part numbers)

3.1 In words

Table 3-1: Delivery contents, in words

Pos.	Quantity	Element / Description	Size	O.K.	Missing
01	1	Steel mast	Ø 193,7 mm / 6200 mm lg.		
02	1	Play part (nets and bird's nests)	/		
03	1	Mast cap	Ø 219,1 mm / 1240 mm		
04	8	Glue-laminated beam	Ø 139 mm / 1650 mm lg.		
05	4	Top rope for glulam pole (pre-assembled on Pos. 03)	1850 mm lg.		
06	1	Flag / blue + threaded bolt + 1x nut + 1x Self-securing nut + 1x Cap (black)	M16		
100	3	shackle	M6 / VA		
101	20	Chain adapter (stainless steel)	M12		
102	20	Fix anchor	M12		
103	17	nyloc nut + black cap	M12		
104	8	Ring nut (1x pre-assembled)	M12 / VA		
105	8	Red post cap	Ø 139 mm		
106	24	Fillister-head screw	5 x 30 mm		
107	8	Threaded bolt + 2x acorn nut + 2x washer	M10 x 175 mm VA		
108	3	Loctite	3 ml		
109	8	Hexagon socket screw with flat point	M12 x 25 mm		
112	1	anchor plate + eye bolt M16x25 nut M16	500 mm x 500 mm / verz.		
113	48	Washer (2x pre-assembled)	M12		
KNR	**1**	**PVC pipe (Provided by customer)**	**Ø 400 mm / 850 mm lg.**		

3.2

3.3 In symbols

Table 3-2: Delivery contents, in symbols

Pos.	Quantity	Symbol
01	1	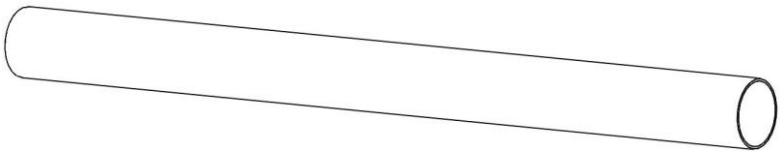 Ø 193,7 mm / 6200 mm lg.
02	1	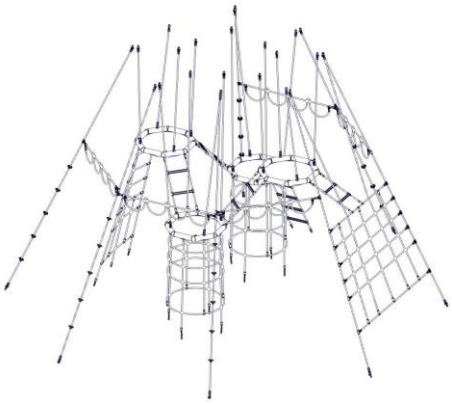
03	1	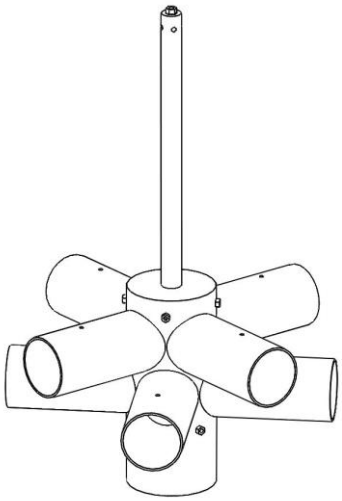 Ø 219,1 mm / 1240 mm
04	8	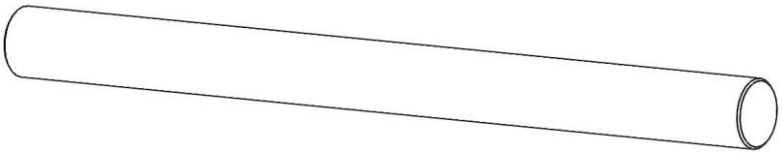 Ø 139 mm / 1650 mm lg.

05	4	1850 mm lg. (pre-assembled on Pos. 03)
06	1	M16
100	3	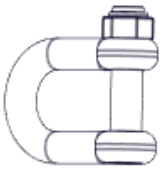 M6
101	20	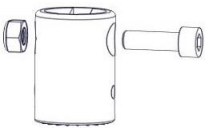 Chain adapter (stainless steel) M12
102	20	M12 Fix anchor
103	17	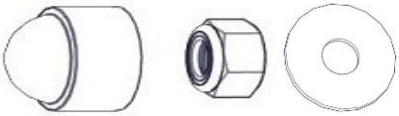 M12
104	8	M12 (1x pre-assembled)
105	8	

		Ø 139 mm
106	24	5 x 30 mm
107	8	M10 x 175 mm
108	2	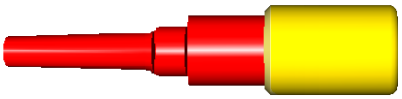 3 ml
109	8	M12 x 25 mm
112	1	RM M16 VZ 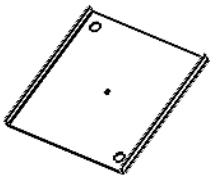 500 x 500 mm Sechskantmutter M16
113	48	M12 (2x pre-assembled)
KNR	**1**	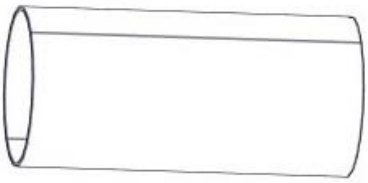 **Ø 400 mm / 850 mm lg.**

	4 Abbreviations

AB	Setting time min. 7-8 days
D	C25/30 concrete (for foundations) Q.ty required: 3.2 m^2
D.be.	Fill in around the central mast with concrete. (between drainage tube and central mast)
DT	Detail
EDF	turn the ground anchor in to foundation / don't press
F	Fall protection
FOU	Foundation
G	Drainage layer
HK.entf.!!	Remove wooden wedges after concrete work
KELA	Chains should be shortened during installation if necessary.
LE MO	Mount the ladder
KNR	Drainage tube (e.g. concrete or PVC duct, Ø 400 mm / lg. 850 mm on site)
MEb	Pay careful attention to mark when mounting the post.
MKe	Insert the mast into the drainage tube
MSE	After mounting the steel post and the glue-laminated beams, the ropes must first be hooked in
O.K.	Top edge play level
O.K.F.	Top edge foundation
OAZ	The opening must be show outwards / not in tensile direction
PNU	Lay the net-part packet with the underside around the mast.
PS	Minimum safety area 95.5 m^2
SSch	After putting on the post-cap, grease the hexagon-screw and tight up.
SE MO	Mount the rope
UEA!	Smooth out any unevenness in the foundation that occurs when screwing in the ground anchor. Otherwise a water accumulation develops
VO	Pre-assembled
⚠	**Round off foundation edges (min.R = 100 mm)! Sizes of fundations are "4-5" (natural ground).** **Soil class 4: soft to medium plasticity, interleave bound, with minor portion of stone (portion < 30% with bigger diameter of 63 mm grain size) Soil class 5 : ground with soil class 3 and 4 with big portion of stones (portion > 30% with bigger diameter of 63 mm grain size)** **In case of sandy and soft soils, the surface measure of foundations have to be enlarged for about 50%!**

Because of the natural charateristics of wood it is normal that shrinking and swelling occure due to heat and moisture. For example a wood post with a Ø of 180mm can vary between 173mm and 183mm. In occurrence it is necessary that bolts and screws be retightened and eventually shortened!

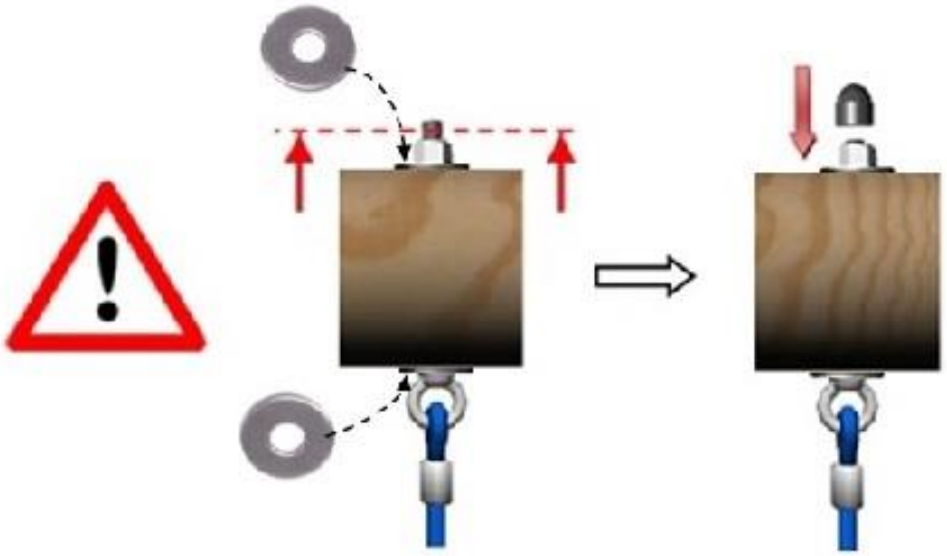

Securing bolts and nuts !

All bolts, nuts, cylinder nuts, etc. (except for Nyloc nuts) must be secured with at least 5 drops of Loctite!

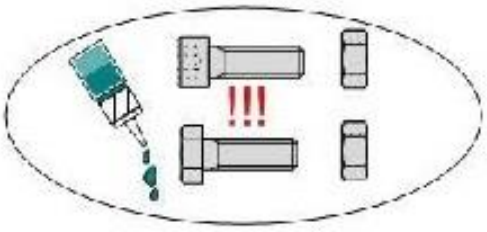

5 Assembly instructions

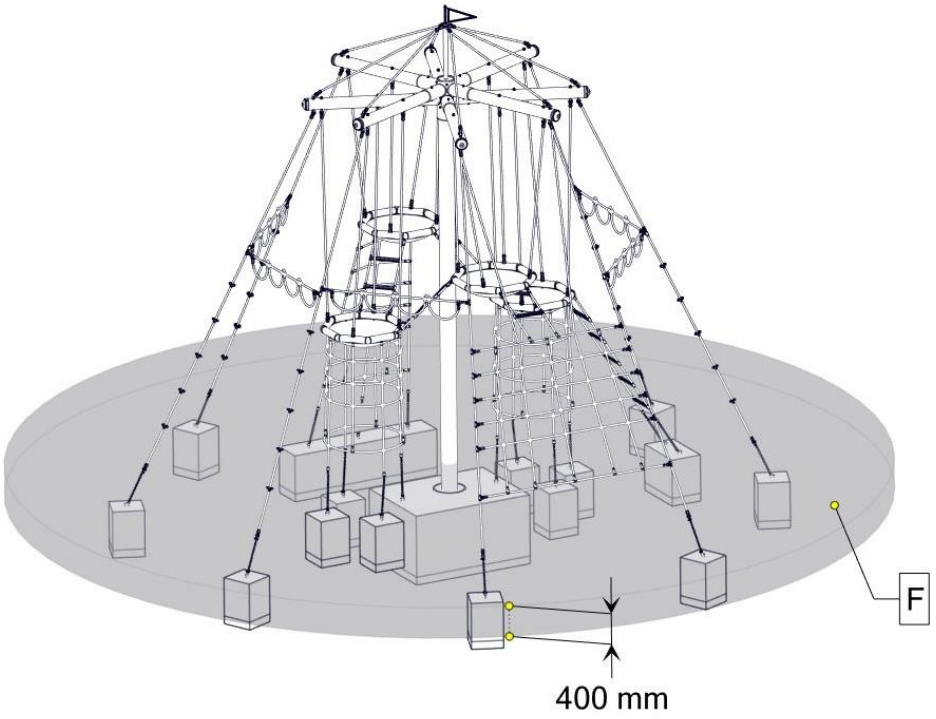

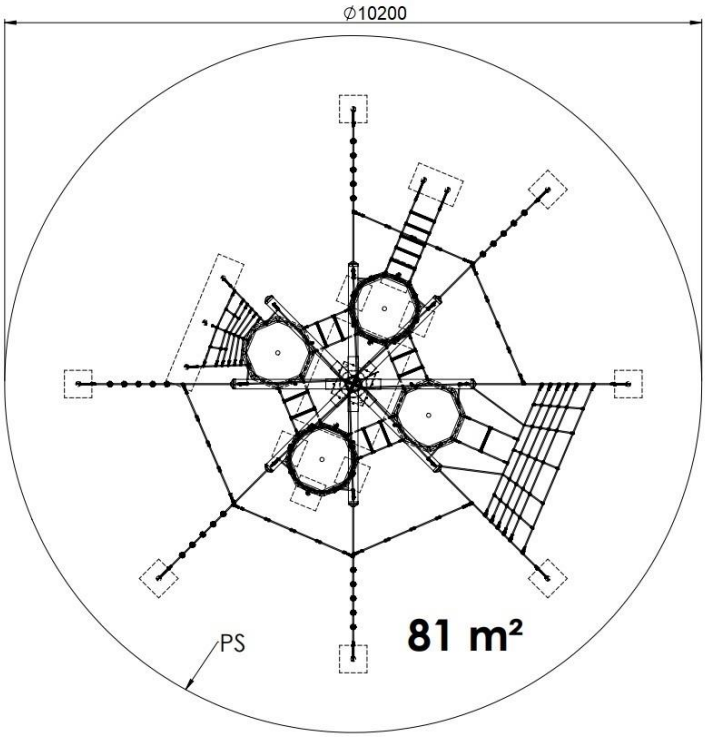

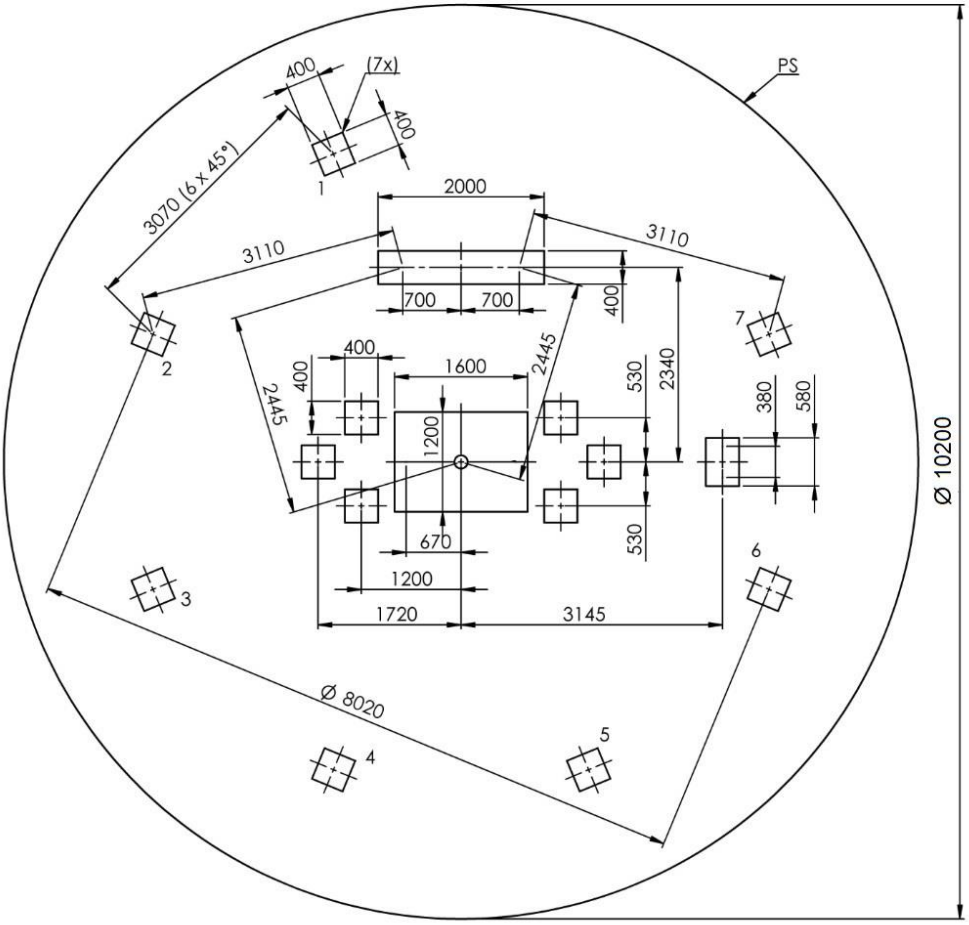
PS
400
(7x)
400
1
3070 (6 X 45°)
2000
3110
3110
700
700
400
2
7
400
400
1600
2445
2445
530
2340
380
580
1200
670
530
1200
1720
3145
3
6
Ø 8020
4
5
Ø 10200

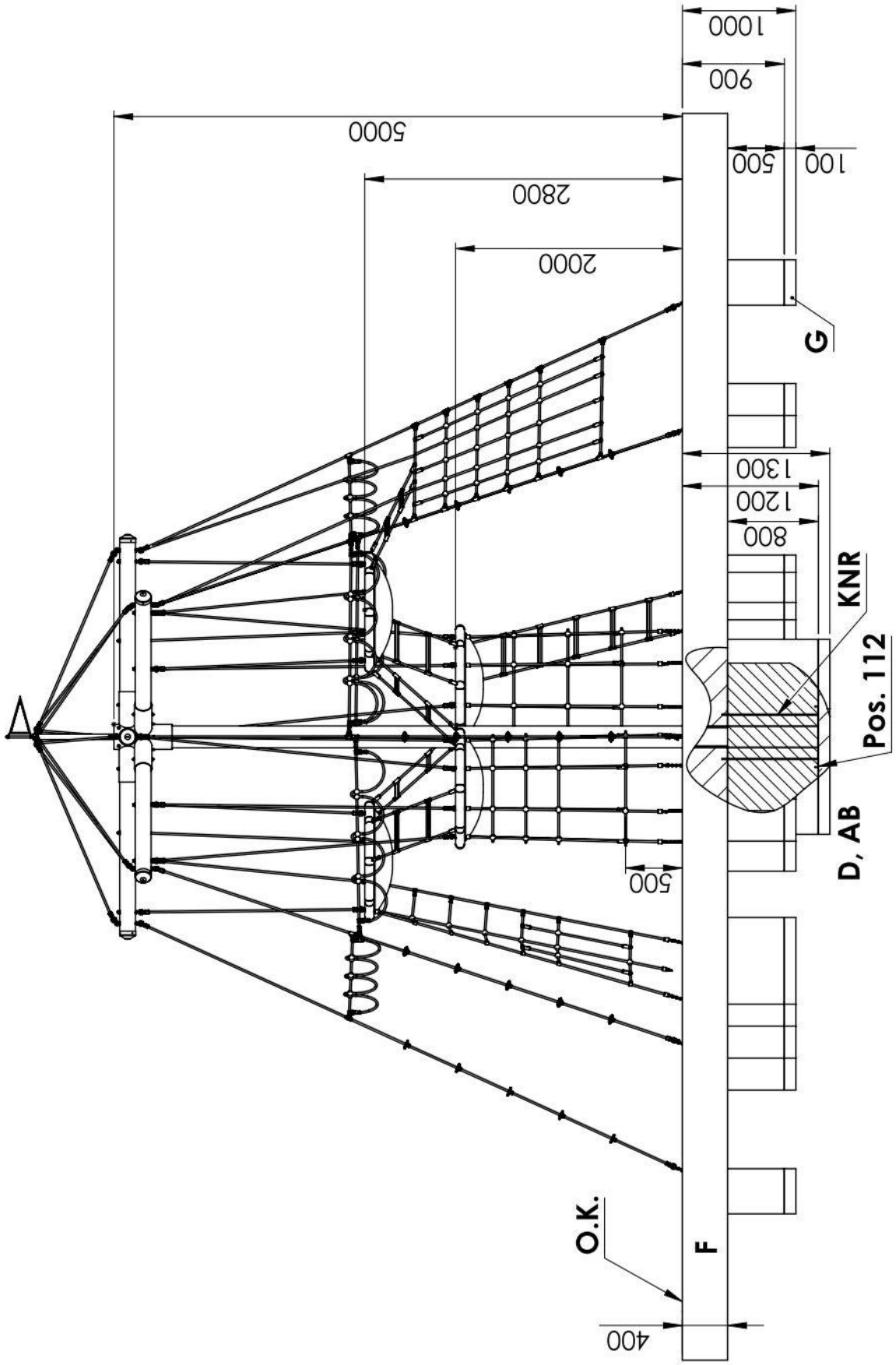
1000
900
5000
100
500
2800
2000
G
1300
1200
800
KNR
Pos. 112
D, AB
500
O.K.
F
400

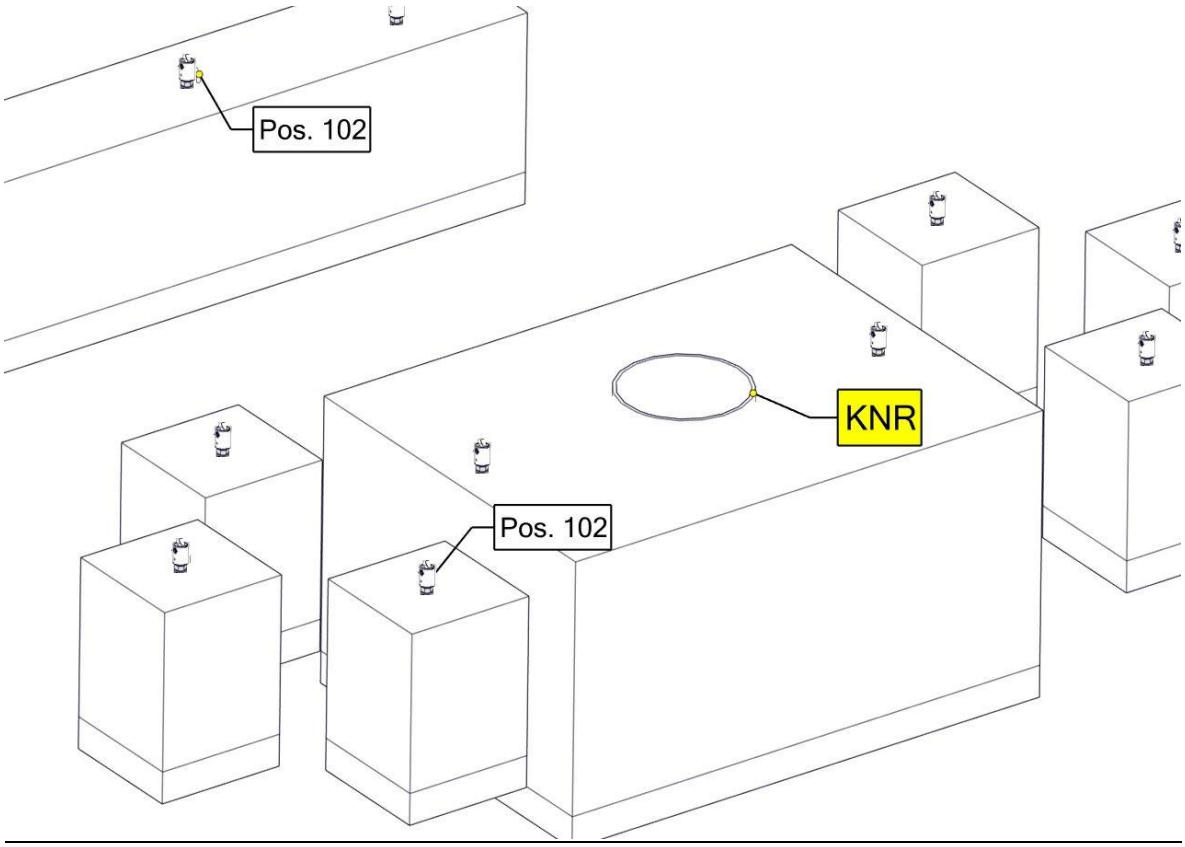
Pos. 102
KNR
Pos. 102

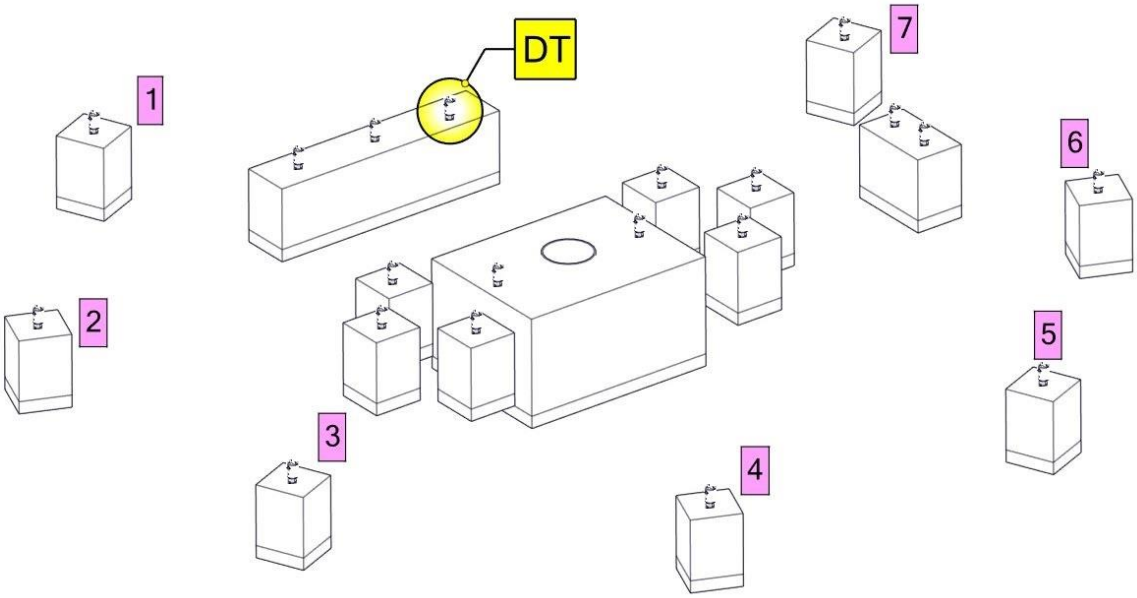
DT
1
2
3
4
5
6
7

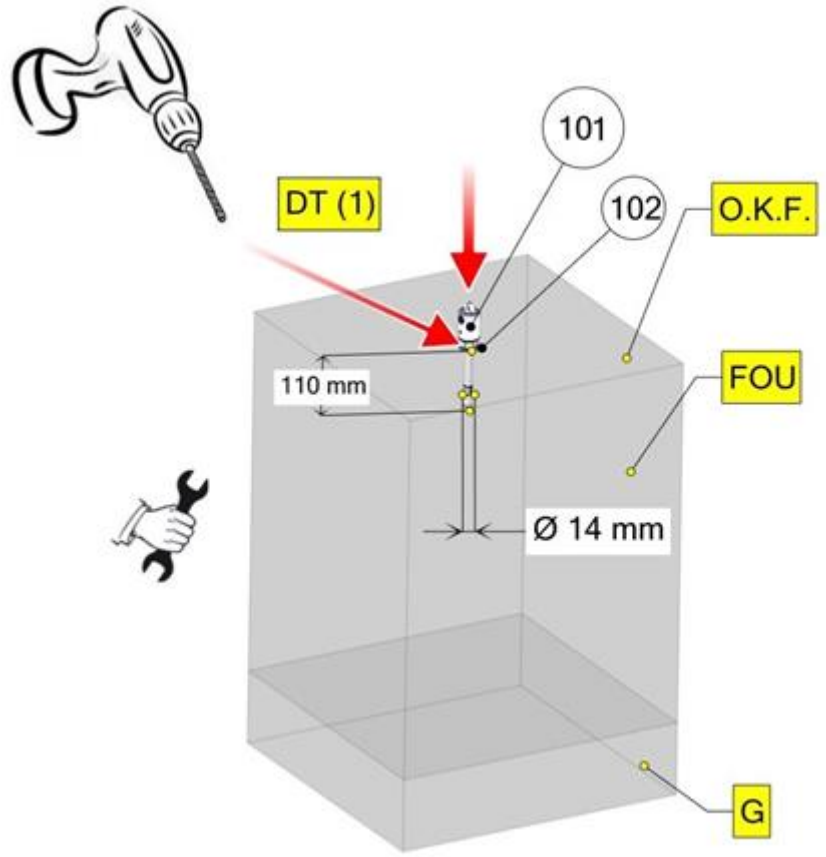
101
DT (1)
102
O.K.F.
110 mm
FOU
Ø 14 mm
G

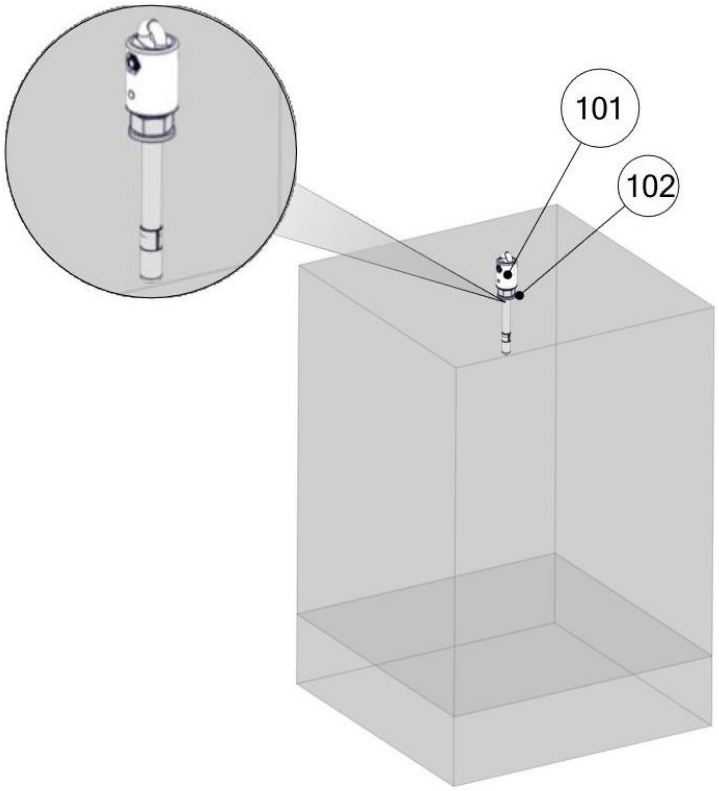
101
102

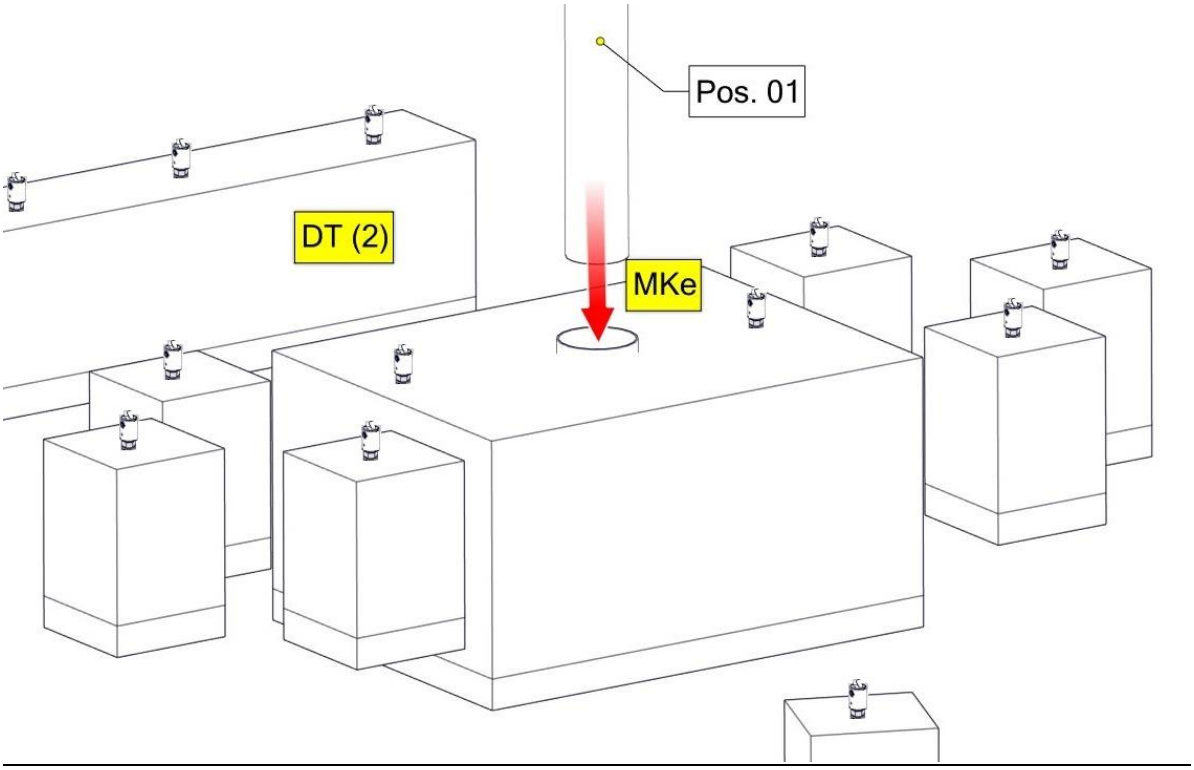
Pos. 01
DT (2)
MKe

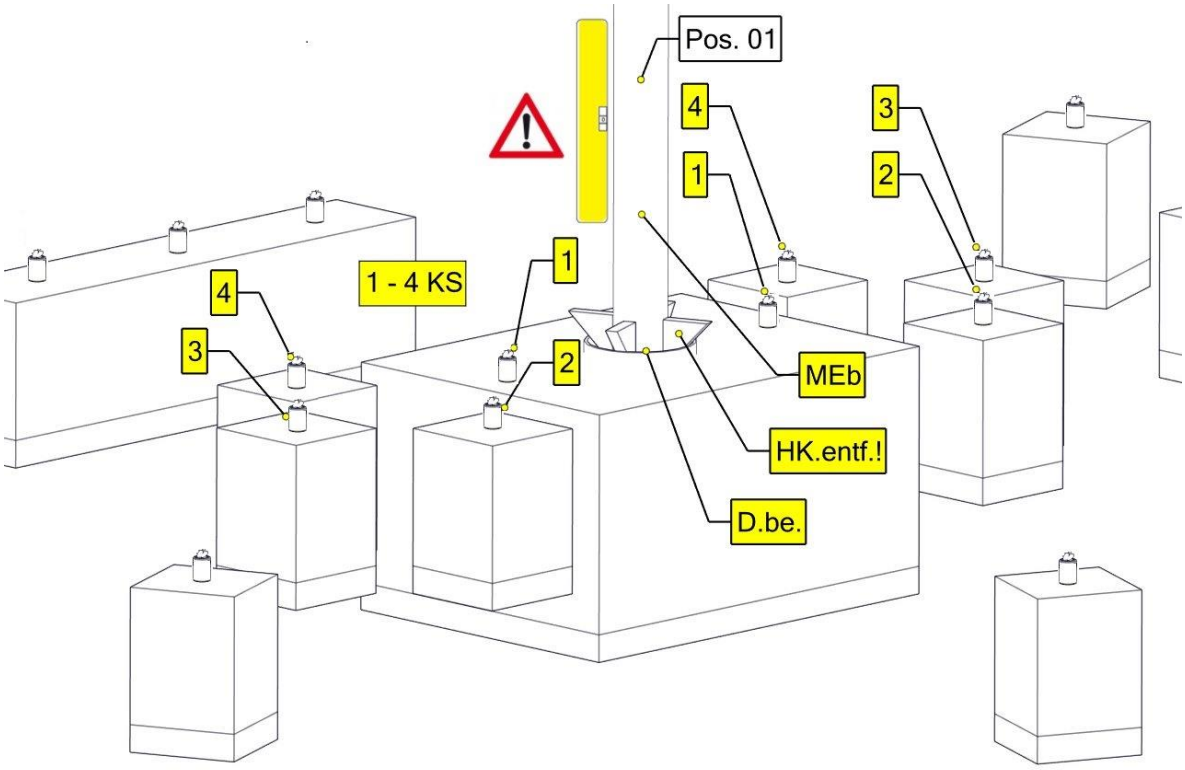
Pos. 01
4
3
1
2
1 - 4 KS
1
4
3
2
MEb
HK.entf.!
D.be.

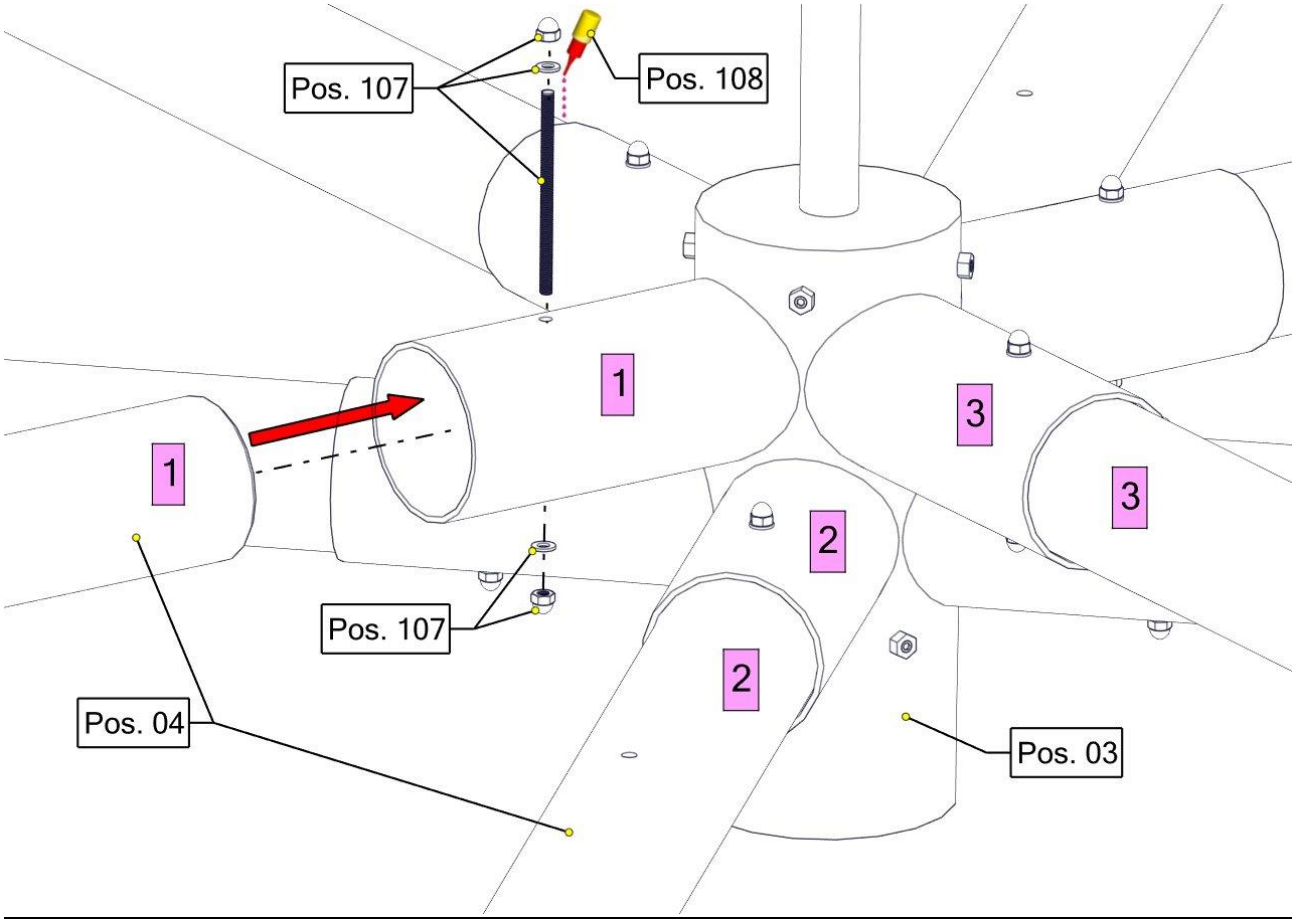
Pos. 107
Pos. 108
1
1
3
3
2
2
Pos. 107
Pos. 04
Pos. 03

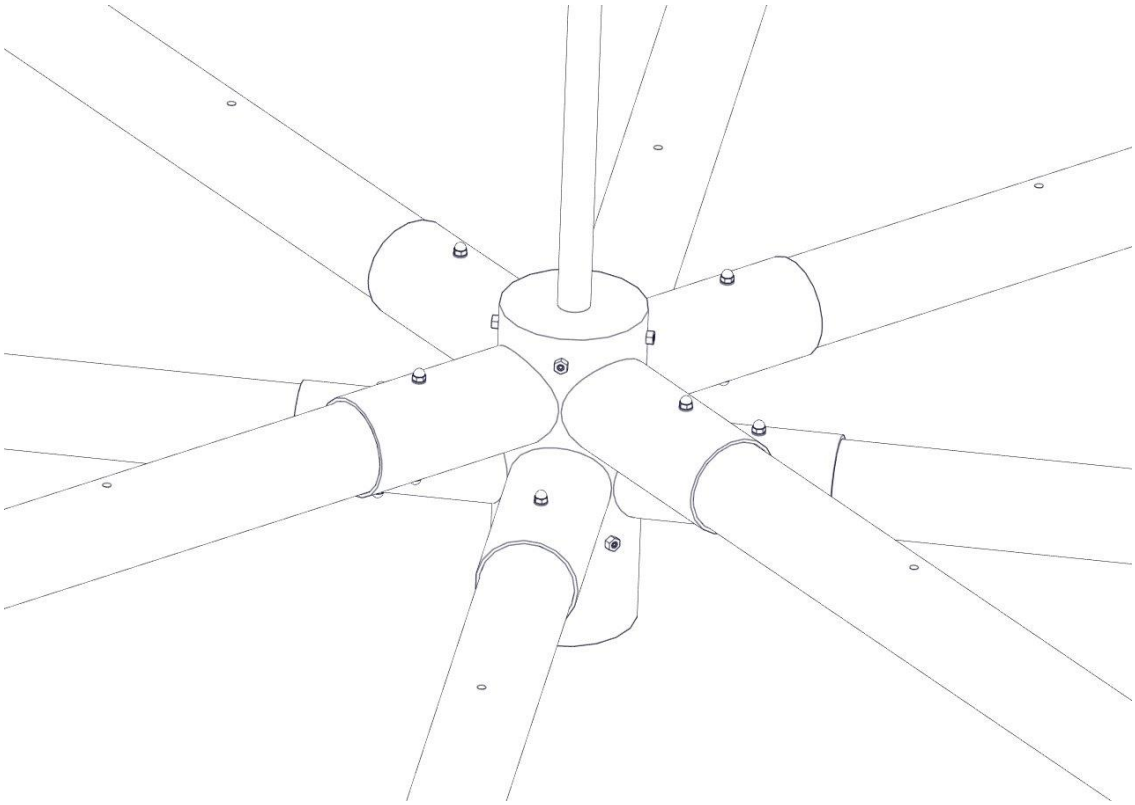

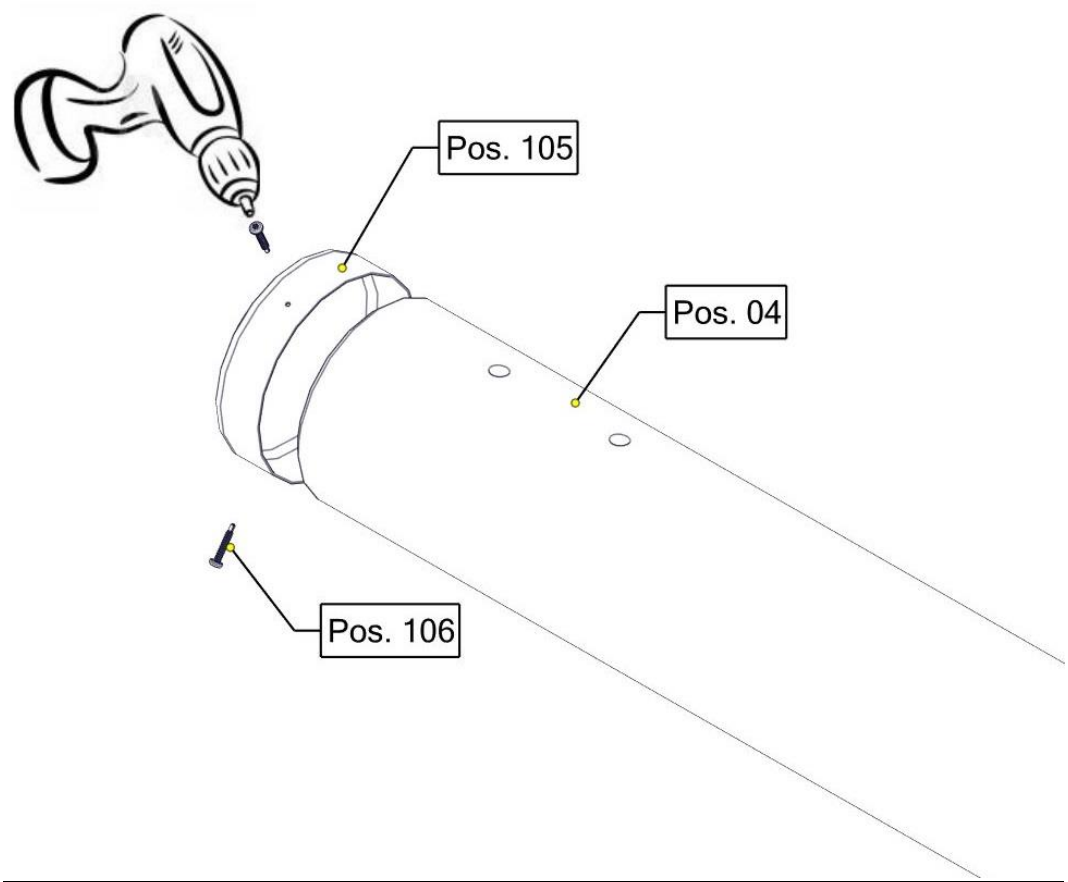
Pos. 105
Pos. 04
Pos. 106

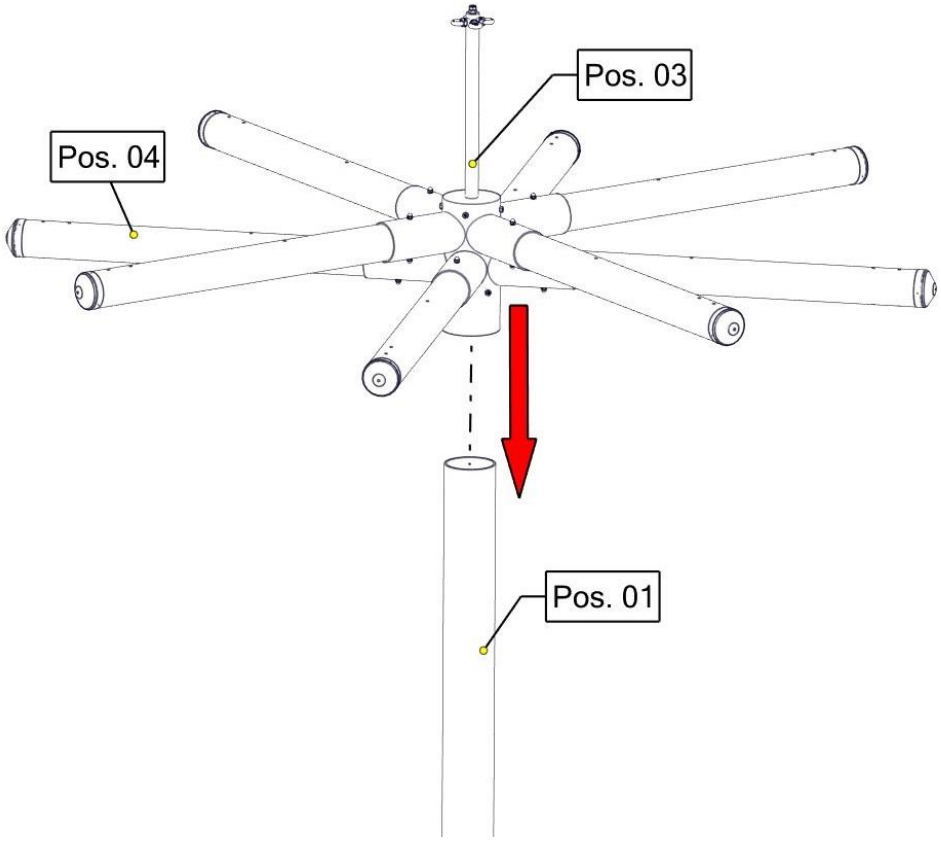
Pos. 03
Pos. 04
Pos. 01

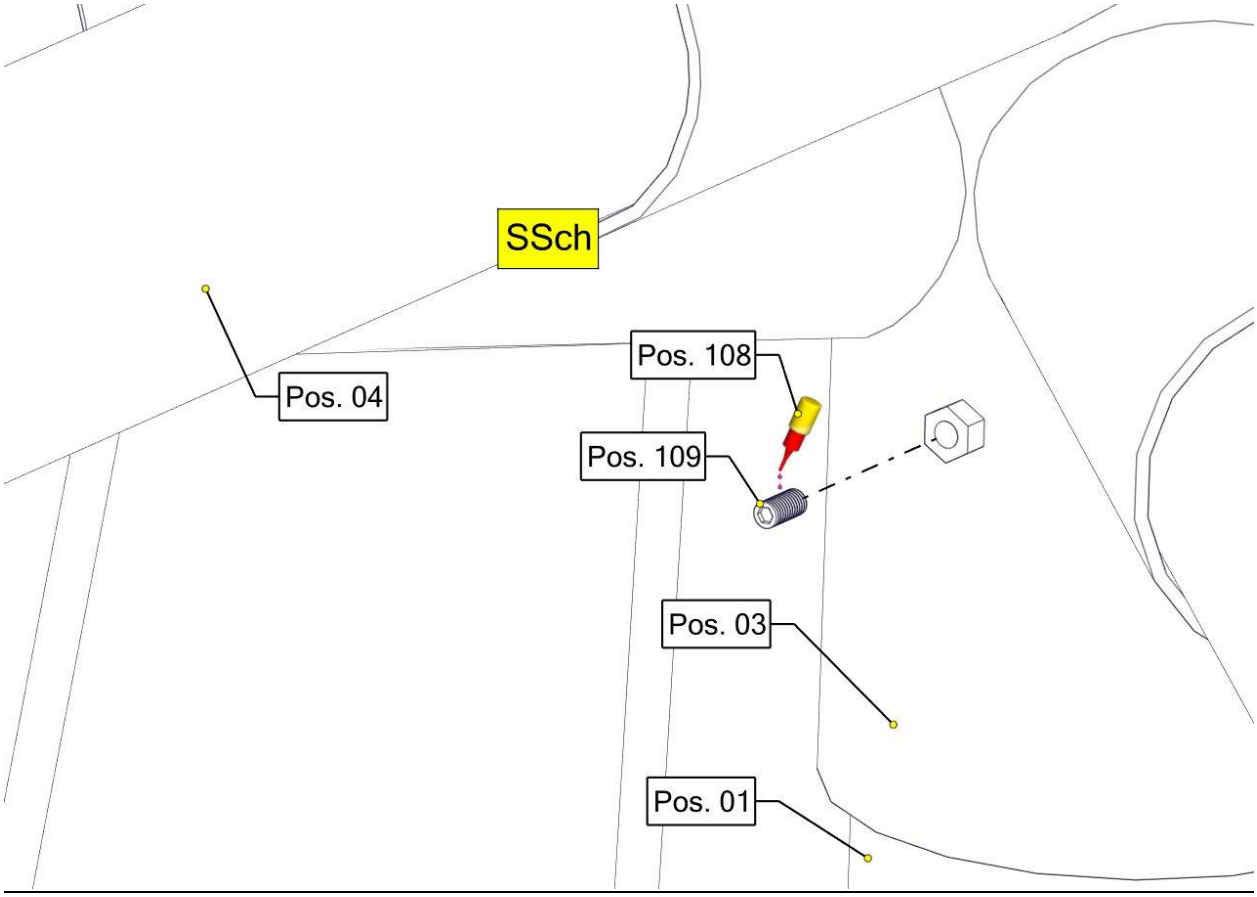
SSch
Pos. 04
Pos. 108
Pos. 109
Pos. 03
Pos. 01

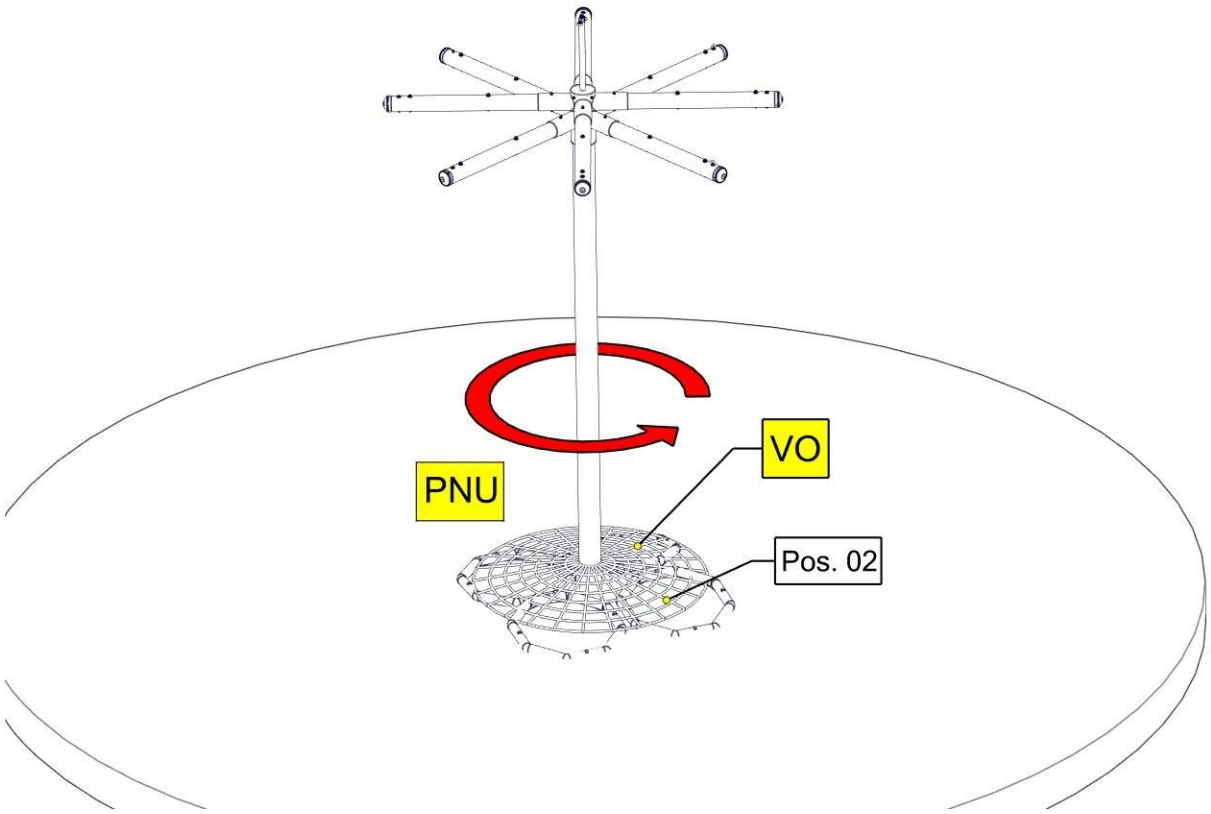
PNU
VO
Pos. 02

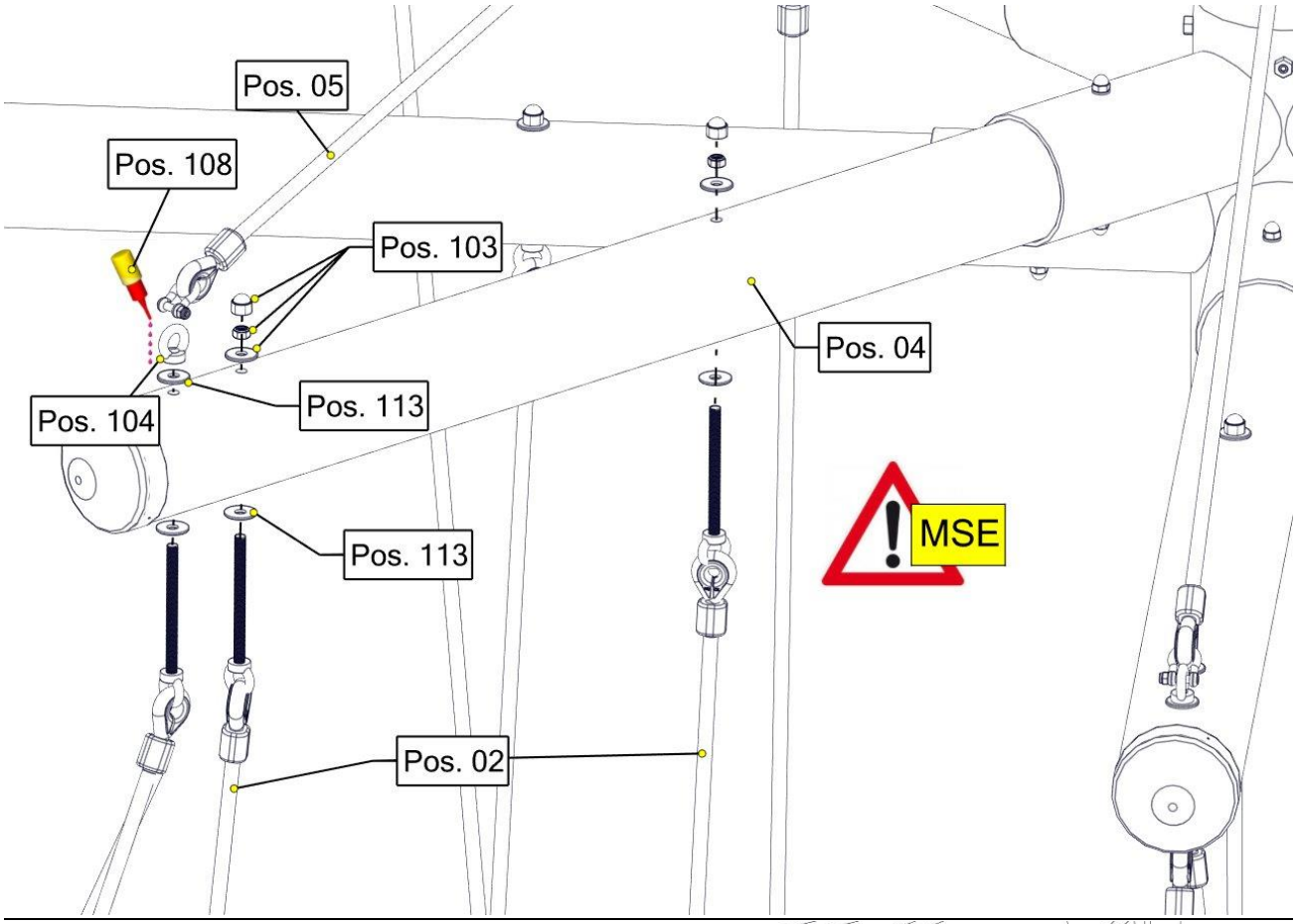
Pos. 05
Pos. 108
Pos. 103
Pos. 04
Pos. 113
Pos. 104
Pos. 113
MSE
Pos. 02

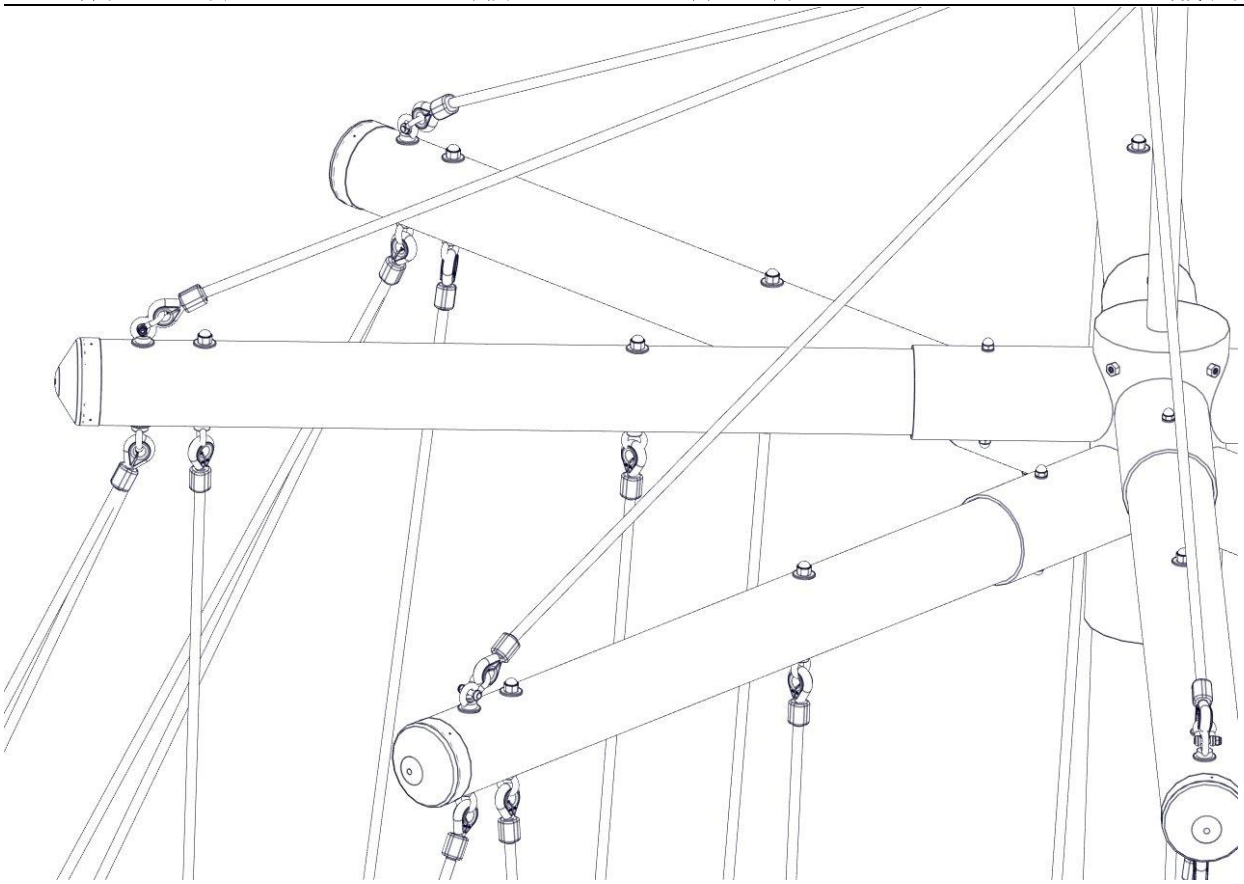

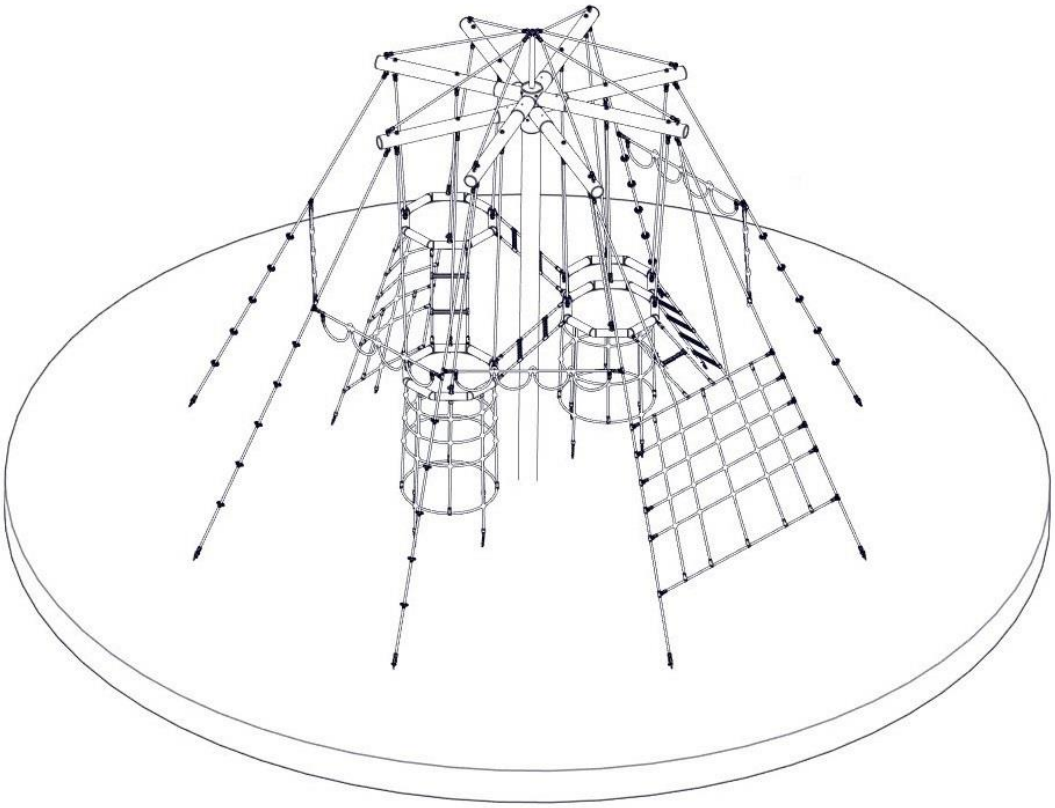

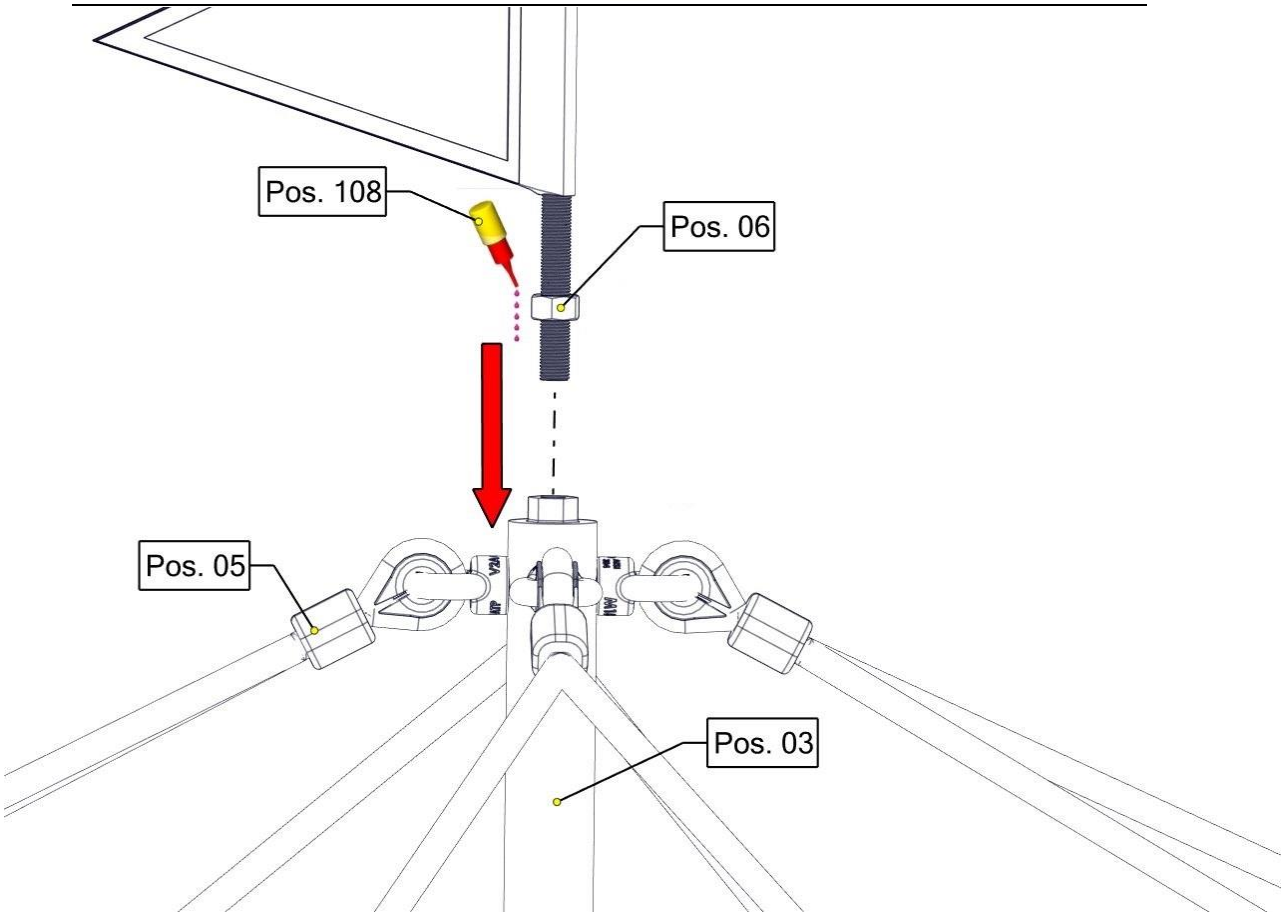
Pos. 108
Pos. 06
Pos. 05
Pos. 03

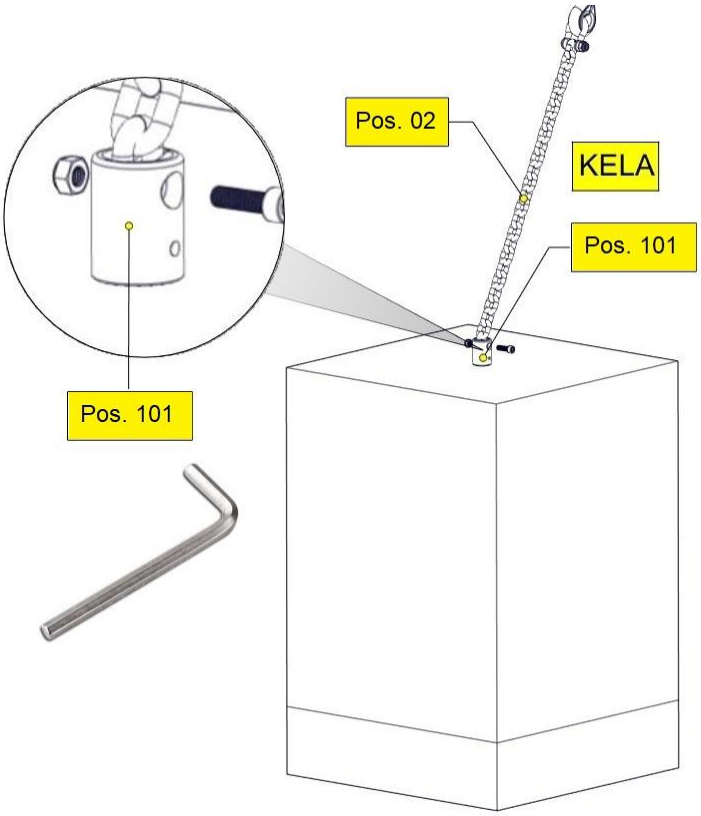
Pos. 02
KELA
Pos. 101
Pos. 101

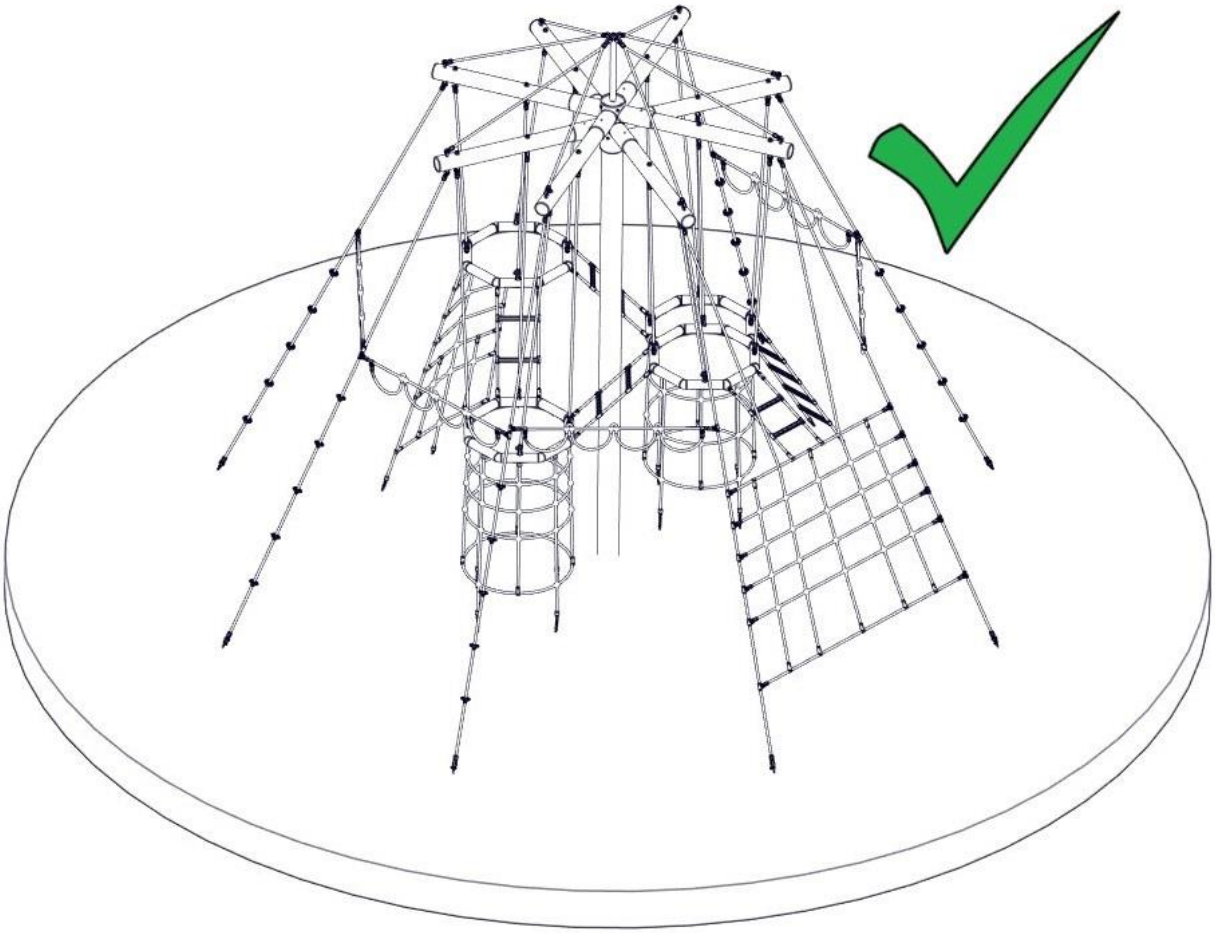

6 Post installation checks

Notice

If the equipment has not been installed safely, you must ensure that the public is prevented from using it.

6.1 Marking filler depth

- Labelling the posts to show the depth of material provided as fall protection (i.e. loose filler).

6.2 The equipment has not been installed safely in the following cases:

- Safe equipment installation is not complete.
- The protective surface has not been installed yet.
- Appropriate maintenance work cannot guarantee operational safety.

6.3 Removal of all assembly aids

- Please make sure that all assembly aids have been removed from the playing area. The equipment must not be approved for use until this check has been made.

6.4 Information about inspection of the equipment before it is used for the first time

- There are no special inspection requirements to be met before the equipment is used for the first time.

6.5 Retighten bolts

- After one week of play, please retighten all bolts again. Later upon respective maintenance.

B Maintenance instructions Bird’s nest tree (EU-GSM) Art. 4652

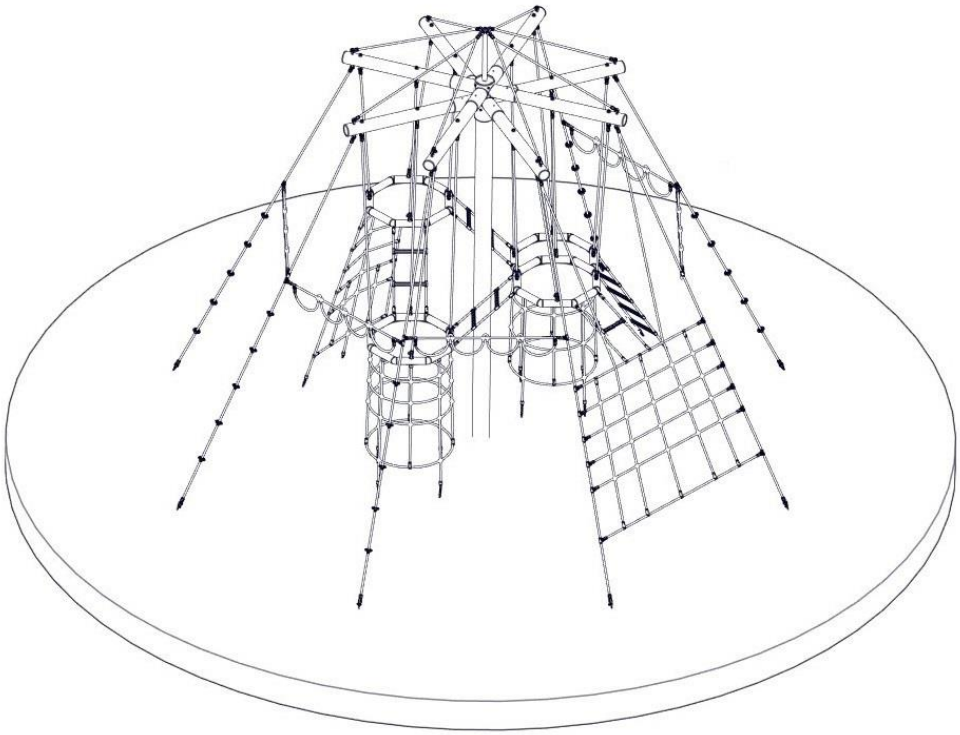

Revision history
Revision 0 – 2006-02-13

The first allowed version

Maintenance instruction

Revision 19 -2019-02-11 Einschraubanker statt Kette FH
All rights reserved

© Copyright 2006 Huck Seiltechnik GmbH

7 Introduction Maintenance

7.1 General information

This equipment should be installed, inspected, maintained and operated in accordance with EN 1176-7 guidelines.

Notice

Please note: Providing any necessary repairs are carried out, a piece of play equipment that is inspected regularly cannot become so damaged that it is dangerous.

Any spare parts which may be required can be obtained directly from your supplier.

Attention

This equipment should only be assembled, maintained and repaired by **persons with the necessary expertise**.

A copy of the inspection record should be given to the operator, who must confirm receipt.

This maintenance instruction is based on the standard

“EN 1176-1:2008”.

8 General maintenance information

8.1 Maintenance intervals

Maintenance intervals are based on average use. Please note that more frequent inspections and/or maintenance are required if the play equipment is subject to intensive use.

8.2 Inspection frequency

The frequency of inspections must be based on actual use. Factors that affect frequency include vandalism, location (e.g. coastal proximity), air pollution and the age of the equipment.

8.3 Maintenance products and procedures

All nuts and bolts are hot-dip galvanised or stainless steel. One of the characteristics of stainless steel is that uncontrolled cold welding may occur when the nuts are tightened. To prevent this, it is necessary to spray the nuts and bolts with Teflon spray or another similar lubricant.

8.4 Spare parts

All spare parts must conform to the manufacturer’s specifications.

8.5 Identifying spare parts

All spare parts are listed in the parts list. The parts list follows the installation requirements.

8.6 Special instructions for the disposal of individual equipment components

No special instructions are necessary for the disposal of individual equipment components.

8.7 Special measures during the break-in period

No later than 2 weeks after assembly, all screwed connections should be checked and tightened if necessary.

8.8 Drainage holes

All drainage holes should be kept clear.

8.9 Maintenance of protective surfaces

Surfaces providing fall protection must also be maintained regularly. It is particularly important to maintain the correct level of loose surface material and add more if necessary.

8.10 Faults

Faults must be repaired as soon as they are detected. If serious defects that compromise safety cannot be repaired straight away, the public must be prevented from using the equipment with immediate effect.

8.11 Loose screws

Loose screws always cause quality problems and put safety at risk. Therefore, loose screws should always be tightened and checks carried out to ensure that there are no missing screws (e.g. look out for holes you can see through).

8.12 Preventing equipment use

Use of the equipment should be prevented in the event of incomplete installation, disassembly, maintenance, repairs and faults.

8.13 Claims/liability for faults

Steel posts and footings are guaranteed if regular maintenance is carried out and recorded in writing. Our general terms and conditions apply. Maintenance first takes place after 3 years. The steel posts must be excavated as far as the concrete foundations and checked for corrosion.
Zinc paint should be applied to any corroded areas and scratches.
Check ropes for abrasion. Retreat any that are very worn.

9 Maintenance timetable

9.1 Special advices

9.1.1 Maintenance interval

We strongly advise you to carry out inspections and maintenance work within the specified periods as use of the equipment, the weather and malicious vandalism cause wear and tear that compromises the safety and function of the equipment.

9.1.2 Maintenance intervals in the event of intensive use

Please note that more frequent inspections and/or maintenance are required if the play equipment is subject to intensive use.

9.1.3 Faults that compromise safety

Notice	In the event of a fault that compromises safety, quick action must be taken. This may involve repairing it immediately or shutting down and dismantling the equipment.

9.1.4 Faults that compromise function

Notice	Faults that compromise function should also be repaired immediately. Such faults lower the value of the equipment to the user and encourage malicious vandalism, which may render the equipment less safe. Any damage should also be repaired immediately.

10 Regular maintenance

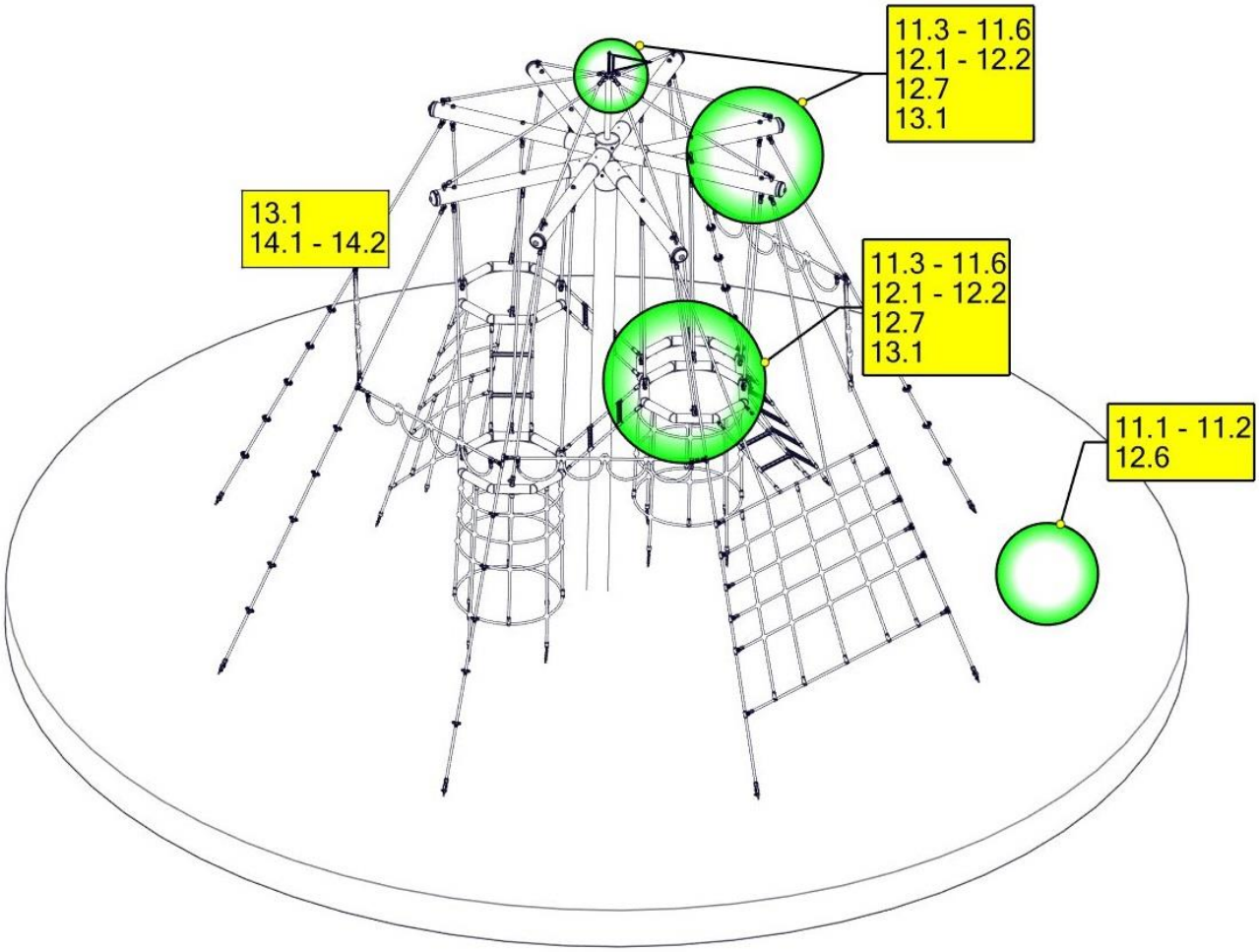

10.1 Regular maintenance (Text)

m = monthly j = 1/4 quarterly j = 1/2 half-yearly

		m	¼ j	½ j
1.	Check ground in fall and protection area for hard objects and loose foundations.	X		
2.	Check stability (supporting posts, springs, supports, foundations etc.).			X
3.	Check all connecting elements and fittings for wear and tear and where necessary retighten. Replace damaged components.	X		
4.	Check that moveable metal components (joints, springs etc) move smoothly and are not worn and where necessary replace. It is not necessary to lubricate joints as we only use maintenance-free metal roller bearings.	X		
5.	Check all attachments such as chains, ropes, nets, etc. for damage and replace if necessary	X		
6.	Check rubber parts, sleeves, rings etc. for wear and tear or damage and replace if necessary.	X		
7.	Check the surface of wooden parts for damage caused by the weather or external influences and repair (Paint with glaze) or replace if necessary.	X		
8.	Check the surface of plastic and metal parts, e.g. slides, for damage and replace if necessary.	X		

It is recommended to carry out the **inspection and maintenance work** out in the specified time-frames, since wear and tear can occur through play, weathering influences or intentional damage, which compromises safety and function levels.

Defects, which compromise safety, must be treated promptly, either by immediately repairing or dismantling or closing down the equipment!

Defects, which compromise function, reduce the play value of the equipment and encourage vandalism, which may compromise safety levels. Damage should also be immediately repaired in this case.

Maintenance and servicing is to be carried only out by professionals.

General: Play equipment which is regularly checked may not be damaged in such a way that it becomes dangerous. However it is essential that where necessary repairs are followed up after regular checks.

11 Monthly maintenance

- Check the spaces between the equipment and the ground (clearance and height of fall).
- Check the ground surface in the area with fall protection for hard objects and loose foundations.
- Check all connecting elements and fittings for wear and tear and tighten if necessary. Replace damaged or missing parts.
- Check that moving metal parts (joints, springs, etc.) move smoothly and are not worn. Replace if necessary. It is not necessary to lubricate joints as we only use maintenance-free metal roller bearings.
- Check all attachments such as chains, ropes, nets, etc. for damage and replace if necessary.
- Check rubber parts, sleeves, etc. for wear and tear or damage and replace if necessary.
- If necessary, remove excess padding material from the post footings due to danger of rotting.
- Check the surface of wooden parts for damage caused by the weather or external influences and mould. Repair or replace if necessary.
- Check the surface of plastic and metal parts, e.g. slides, for damage and replace if necessary.

12 Quarterly maintenance

- Detailed inspection of the operation and stability of the equipment paying particular attention to any wear and tear.
- Tighten all forms of attachment.
- Repaint and retreat surfaces.
- Maintenance of fall protection surfaces.
- Lubrication of joints.
- Check the height of the fall and top up with loose filler if necessary. If the posts are labelled, top up as far as the mark.
- Retighten all bolts

13 Half yearly maintenance

- Stability (check posts, bracing, foundations, etc.).Ascertaining whether there are any changes in equipment safety as a result of repairs that have been carried out or components that have been added or replaced.

Attention

Annual Maintenance

14 Annual maintenance

- Ascertaining that the equipment, foundations and surfaces are safe for operation.
- In particular, the equipment should be checked for decay and corrosion. It may be necessary to dig out or excavate certain components in order to do so. Zinc paint should be applied to corroded areas and scratches.

Attention

The equipment must be inspected by someone **with the necessary expertise** in strict compliance with the instructions issued by Huck Seiltechnik GmbH.

A copy of the inspection record should be given to the operator, who must confirm receipt.

15 Maintenance printout

Name of item: Bird's nest tree / Art. No. 4652 _____

Location: _____

Customer or operator: _____
(Town, Town council, Kindergarten)

Date of inspection	Inspector	O.K.	Accessible	Barriered	Defects	Repaired by	Date

Please copy and return once a year after main inspection has been carried out to the manufacturer by Telefax +49(0)6443/ 83 11 79!
Place the confirmation form in the play equipment files.

16 Hand over document

After the installation of the equipment pass the installation and maintenance documents to the operator. The operator has to receive the hand over documents. The complete filled and signed hand over document should be sent to the supplier.

Art.-No.: 4652

Type of item: Bird's nest tree

Serial number:

Customer or operator (Town, Town council, Kindergarten, etc.):

_____

_____

Competent person in charge:

_____

_____

Installation company (address):

_____

_____

Responsible assistant (assembler):

_____

_____

Received the complete assembly instructions, maintenance instructions and maintenance printout.

_____

(Signature of operator) (Signature of installation company)
(Stamp)

Date: _____