A Assembly instructions
Diablo
Art. 4592-20

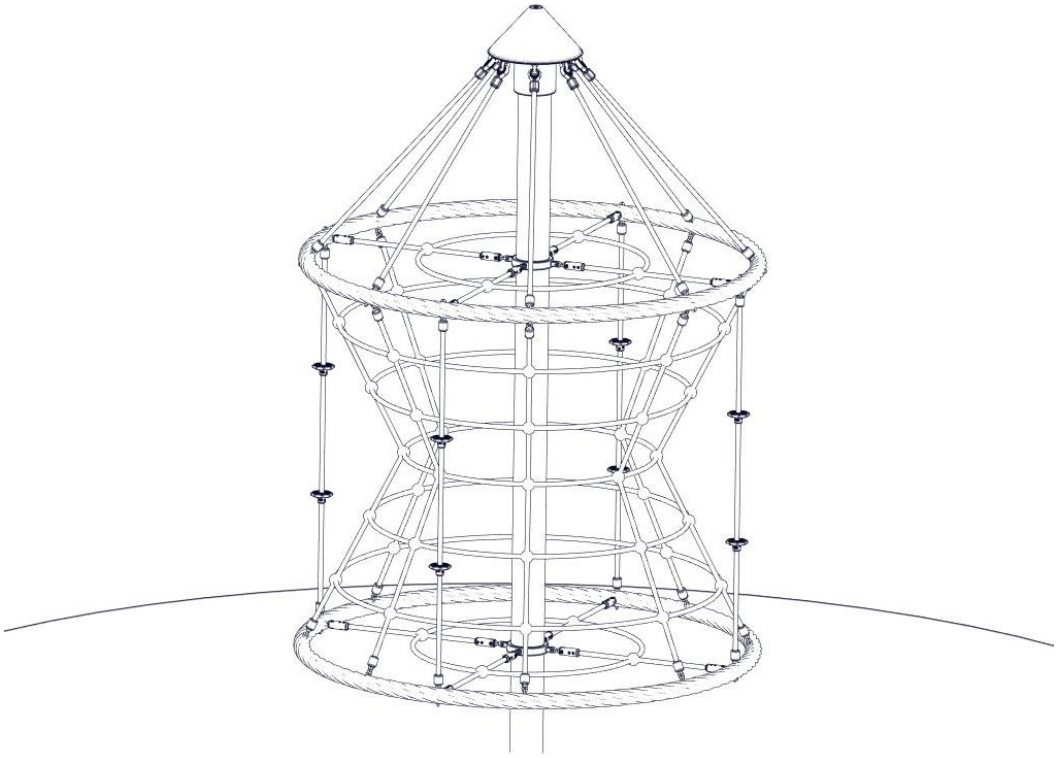

Operator: _____

Location:_____

Revision history
Revision 0 – 2012-05-25

The first allowed version

Assembly instructions
Revision 2 - 2023-01-10
Neue form der Anleitung ZM

All rights reserved

© Copyright 2012 Huck Seiltechnik GmbH

Contents

A Assembly instructions Mini Hour Glass Art. 4592-20 1
1 Introduction Assembling 4
2 Datasheet Mini Hour Glass, Art. 4592-20 6
3 Delivery contents (parts list with part numbers) 8
4 Erection instructions 11
5 Post installation checks 21
B Maintenance instructions Mini Hour Glass 17
6 Introduction Maintenance 19
7 General maintenance information 20
8 Maintenance timetable 22
9 Regular maintenance 23
10 Monthly maintenance 24
11 Quarterly maintenance 24
12 Half yearly maintenance 24
13 Annual maintenance 25
14 Maintenance printout 26
15 Hand over document 28

List of Tables

Table 3-1: Delivery contents, in words 8
Table 3-2: Delivery contents, in symbols 9

1 Introduction Assembling

1.1 General information

This equipment should be installed, inspected, maintained and operated in accordance with EN1176-7 guidelines.

Before installation work commences, please check that you have all of the equipment and fixation components in the parts list provided (see Tables 3-1 and 3-2).

Please consider that the installation has to be carried out only on even terrain (max.slope up to 3%).

Any spare parts that may be required can be obtained directly from your supplier.

Please do not hesitate to call your supplier if you have any problems during installation or in case of any other questions.

Following installation, complete assembly instructions, maintenance instructions and a maintenance record must be sent to the operator who must confirm receipt in writing. See the last page of this document.

All nuts and bolts are hot-dip galvanised or stainless steel.

One of the characteristics of stainless steel is that uncontrolled cold welding may occur when the nuts are tightened. To prevent this, it is necessary to spray the nuts and bolts with Teflon spray or another similar lubricant.

We hereby confirm that this play equipment has been tested and certified in accordance with the play equipment standard EN 1176.

Drawings / Views

All optical drawings are showing only the measurements/dimensions and are no mandatory technical views of the complete item.

We reserve the right to change technical details of our articles which are serving for the further development of our articles and are reasonable for the customer.

Measurement tolerances

Because of the properties and characteristics of the components, minor measurement tolerances compared to the indication on the sketches are possible.

This concerns all shown measurements except the foundation measurements resp. measurements below upper edge ground level/play area.

2 Datasheet Mini Hour Glass, Art. 4592-20

1. Space requirement: Ø 2,00/ Ø 7,00 m (EN 1176)
   safety zone: Ø 5,55 m
   recommended safety zone: Ø 7,00 m
   height of fall: 2.0m

   The Images (individual drawings) are not to scale !!

2. Required safety surface:

Surface material	**Description mm**	**Minimum thickness of layer mm**	**Maximum height of fall mm**
Topsoil grass			<= 1000*
Chipped bark	20 – 80 grain size	300/400	<= 2000/3000
Wood chippings	5 – 30 grain size	300/400	<= 2000/3000
Sand	0.2 – 2 grain size	300/400	<= 2000/3000
Gravel	2 – 8 grain size	300/400	<= 2000/3000
Other ground materials	As recommended by manufacturer		

3. Name and overall dimension of the largest component:
   Steel post (1 piece) length 3,80m, ø 127 mm
4. Name and weight of the heaviest component:
   Steel post (1 piece), approx. 87 kg
5. Intended age group: 3 years and over
6. **Please note that this equipment is set in concrete.**
   Concrete: C25/30
   Required concrete: 1.2 m^3

   Area to be excavated:
   1 x 1.40 m long x 1.40 m wide, total depth 1,10m including 10 cm drainage

   Foundations:
   1 x 1.40 m long x 1.40 m wide, total depth 0,6 m

Soil class 4: soft to medium plasticity, interleave bound, with minor portion of stone (portion < 30% with bigger diameter of 63 mm grain size).

Soil class 5 : ground with soil class 3 and 4 with big portion of stones (portion > 30% with bigger diameter of 63 mm grain size).

In case of sandy and soft soils, the surface measure of foundations have to be enlarged for about 50%!

7. Assembly time, once foundations completed: 1 hour.
   Required assistants: 2-3 persons.

8. Any spare parts which may be required can be obtained directly from your supplier.

9. **We hereby confirm that this item of play equipment has been tested and certified in accordance with the play equipment standard EN 1176.**

3 Delivery contents (parts list with part numbers)

3.1 In words

Table 3-1: Delivery contents, in words

Pos.	Quantity	Element / Description	Size	O.K.	Missing
1	1	Steel post with Aluminum bearing plate	Ø 127 mmx 3.80 m Galvanized		
2	1	POM bearing plate			
3	1	Play Component			
100	1	Threaded Bolt	M12x180mm		
101	2	Nut	M12		
102	1	Top-Cover cap			
103	4	Torx screws	5x30mm		
	1	Side walk stone (provided by customer)	40 x 40 x 6 cm		

3.2 In symbols

Table 3-2: Delivery contents, in symbols

Pos.	Quantity	Symbol
1	1	Ø 127 mm x 3,80 m lengh
2	1	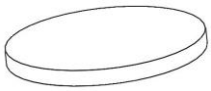 Sliding disk ~Ø127 mm
3	1	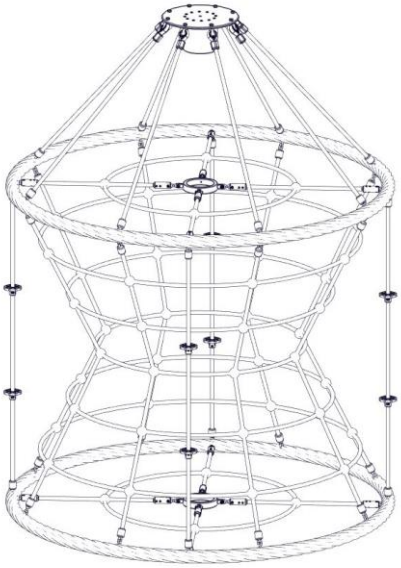
100	1	M12 x 180 mm
101	2	M12
102	1	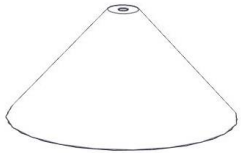 Ø 25 cm
103	4	5 x 30mm

Pos.	Quantity	Symbol
104	1	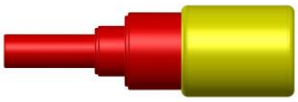 Loctite
	1	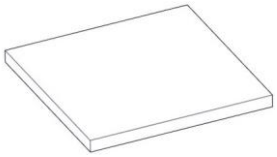 provided by the customer **40 x 40 x 6cm**

Erection instructions

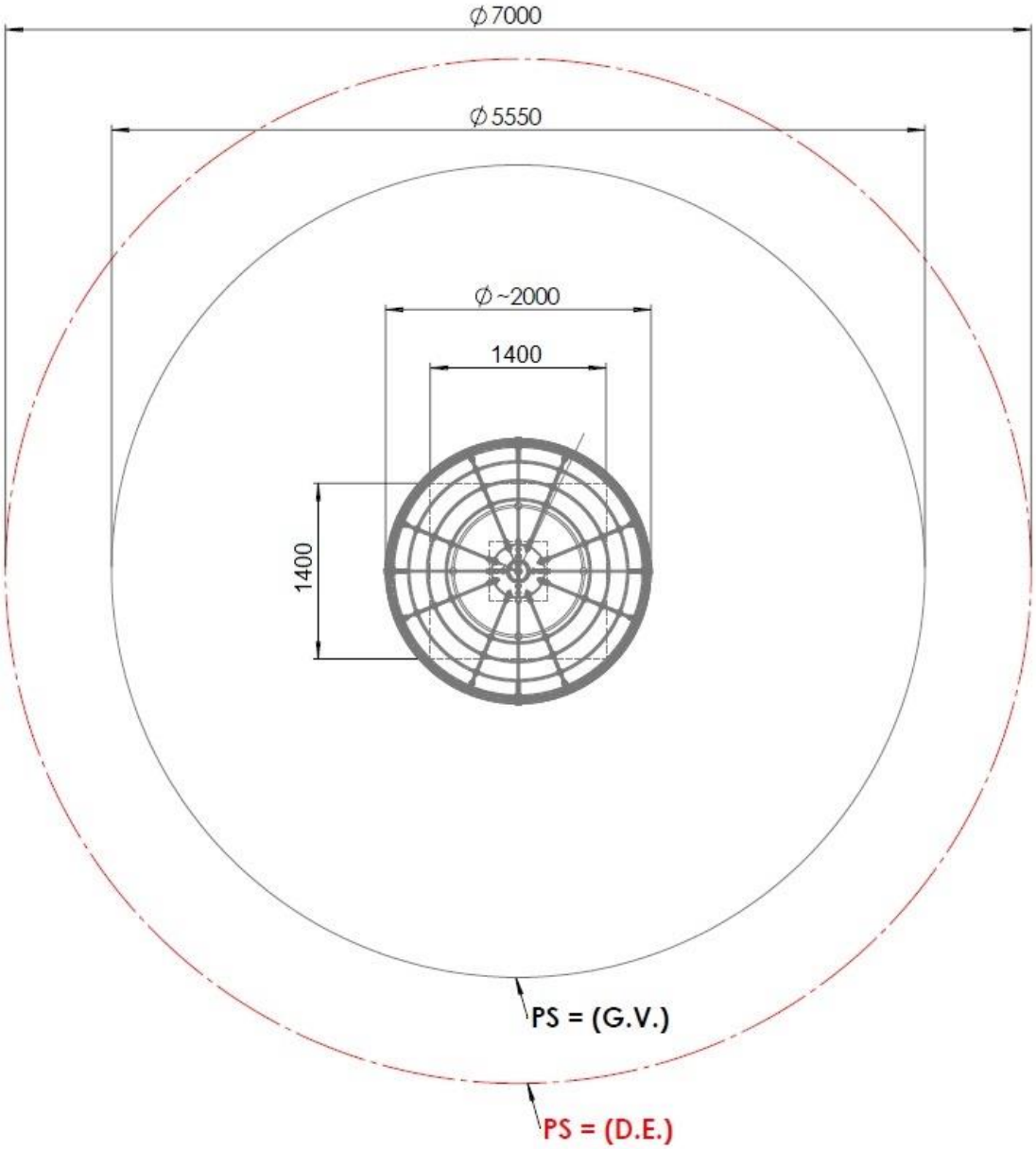

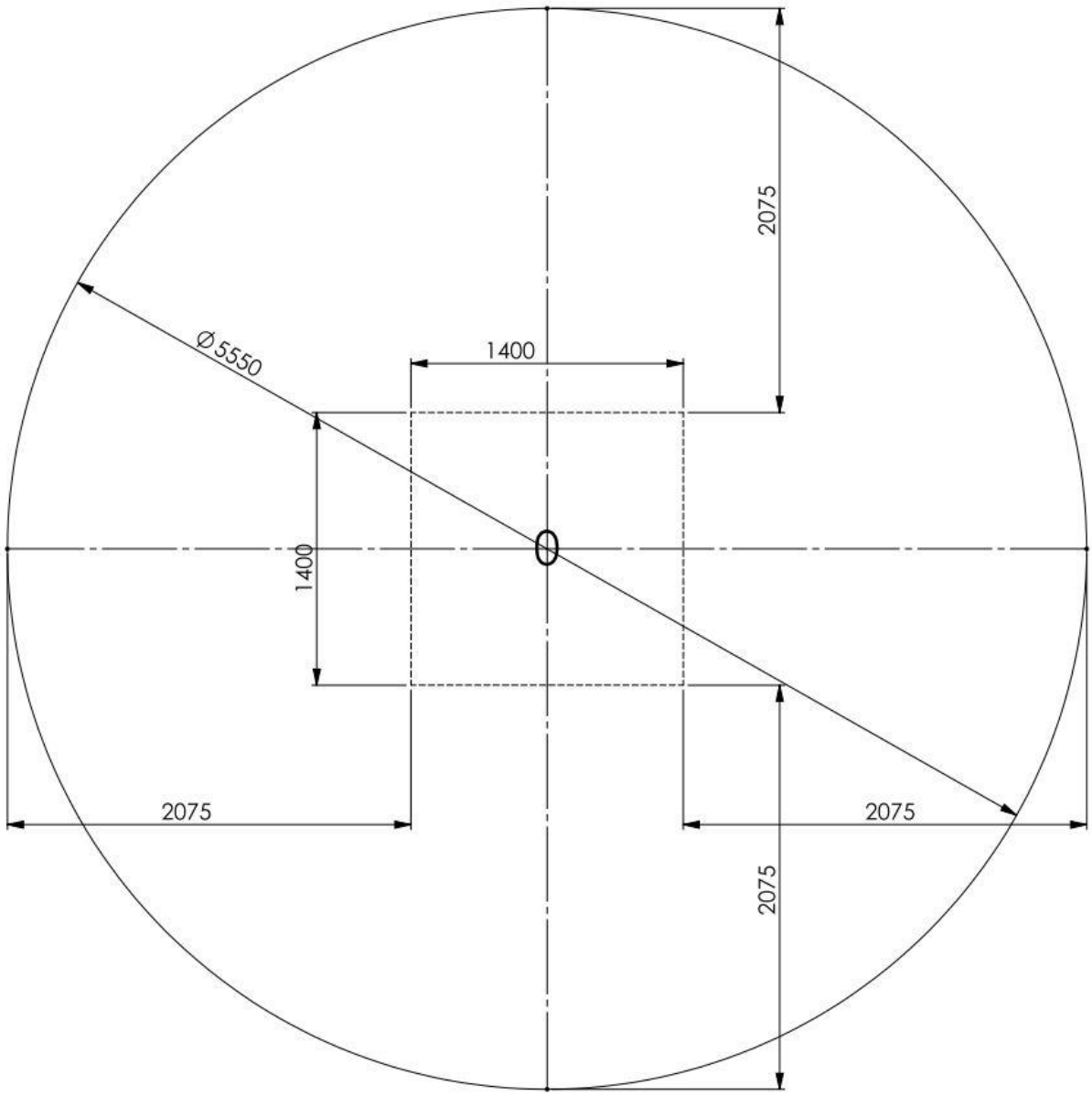
2075
Ø5550
1400
1400
2075
2075
2075

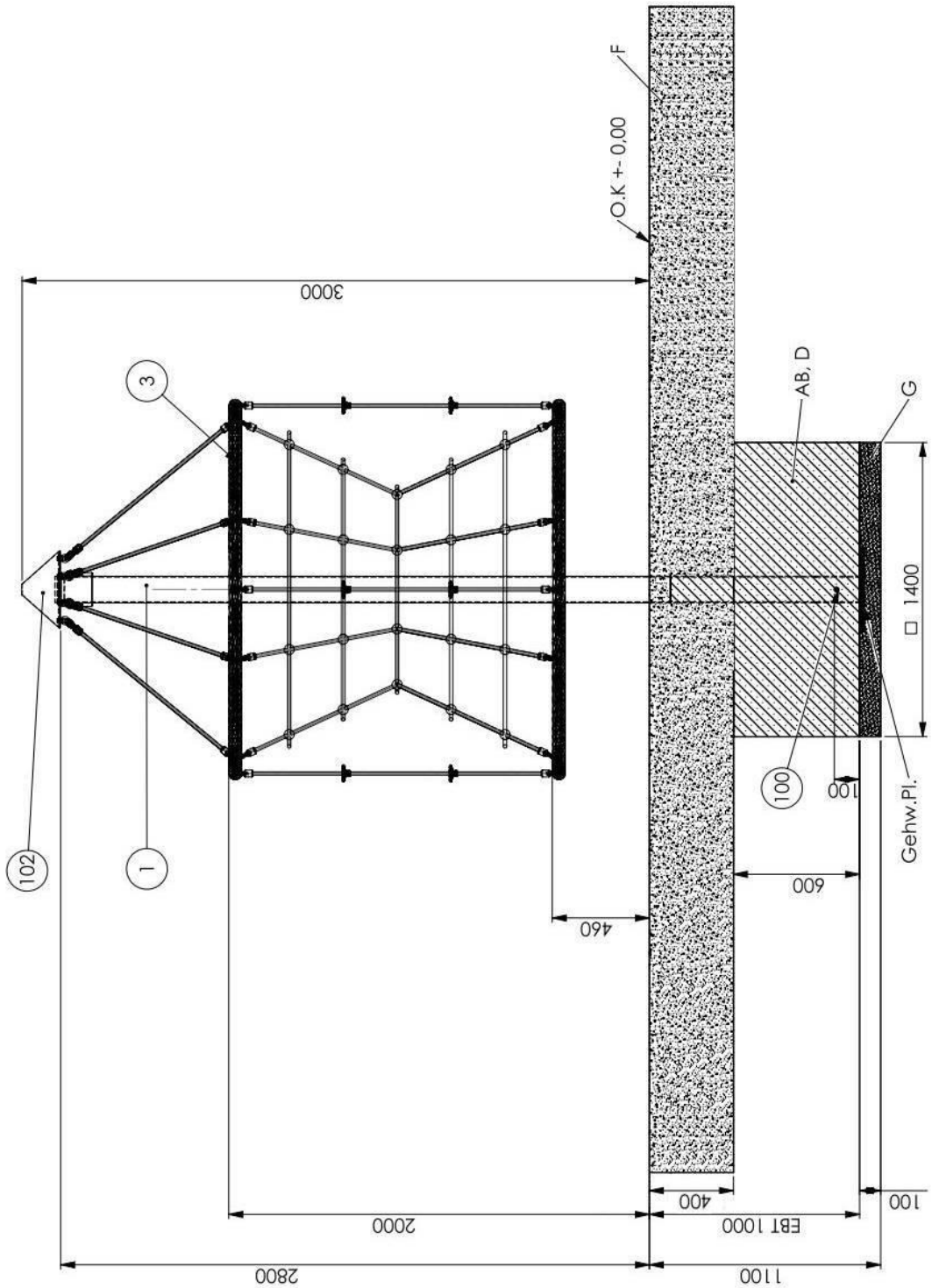
F
O.K +- 0,00
3000
3
AB, D
G
□ 1400
100
100
Gehw.Pl.
102
1
600
460
400
100
2000
EBT 1000
2800
1100

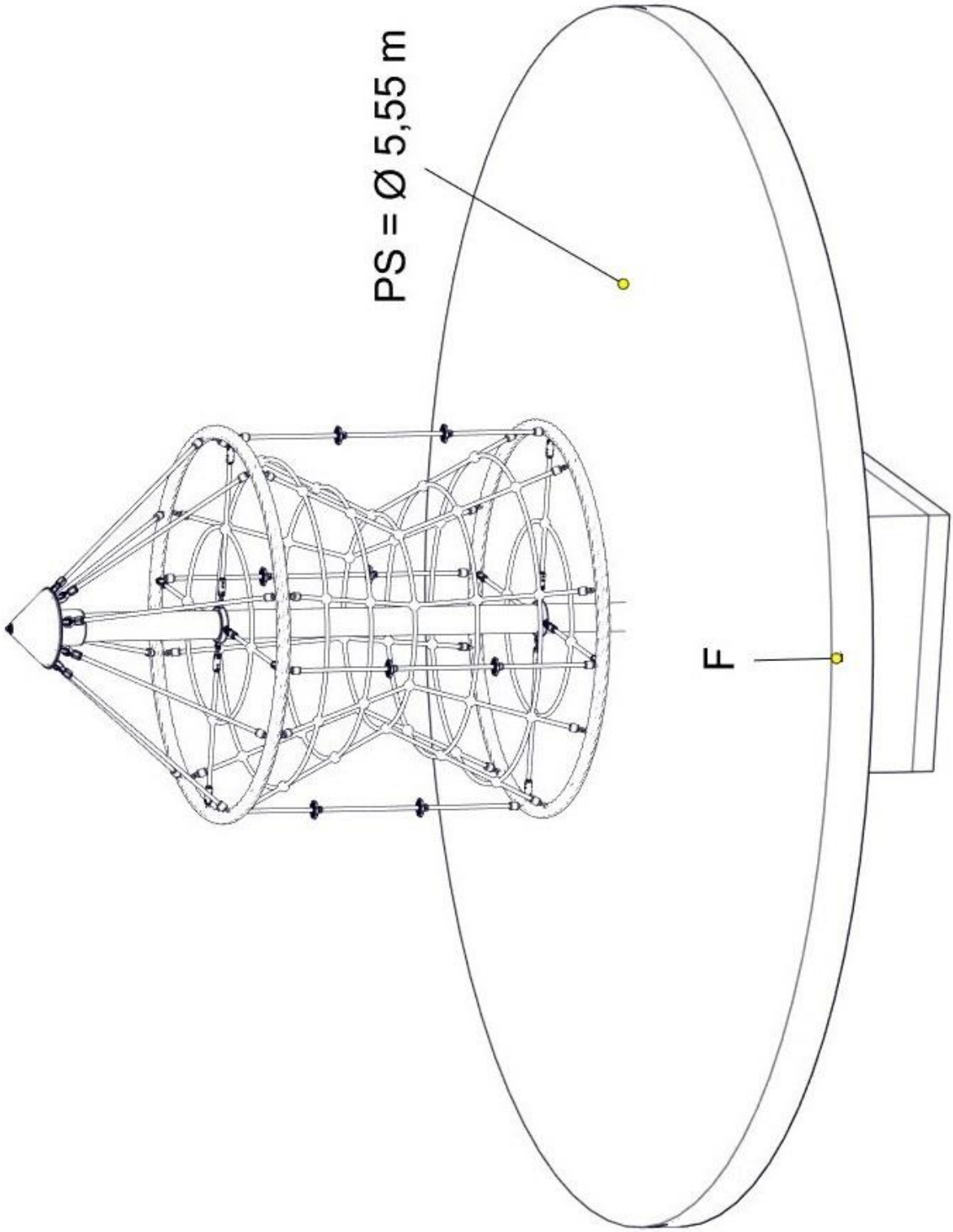
PS = Ø 5,55 m
F

Screw locking devive!

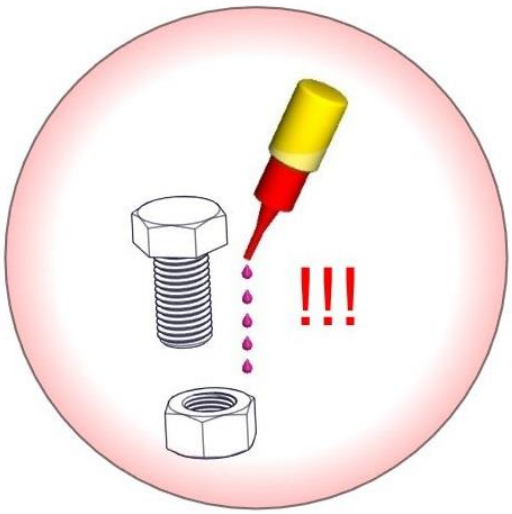

Glue all screws, nuts and sleeves with Loctite.
(not less than 5 drops!)
(exept for lock nut)

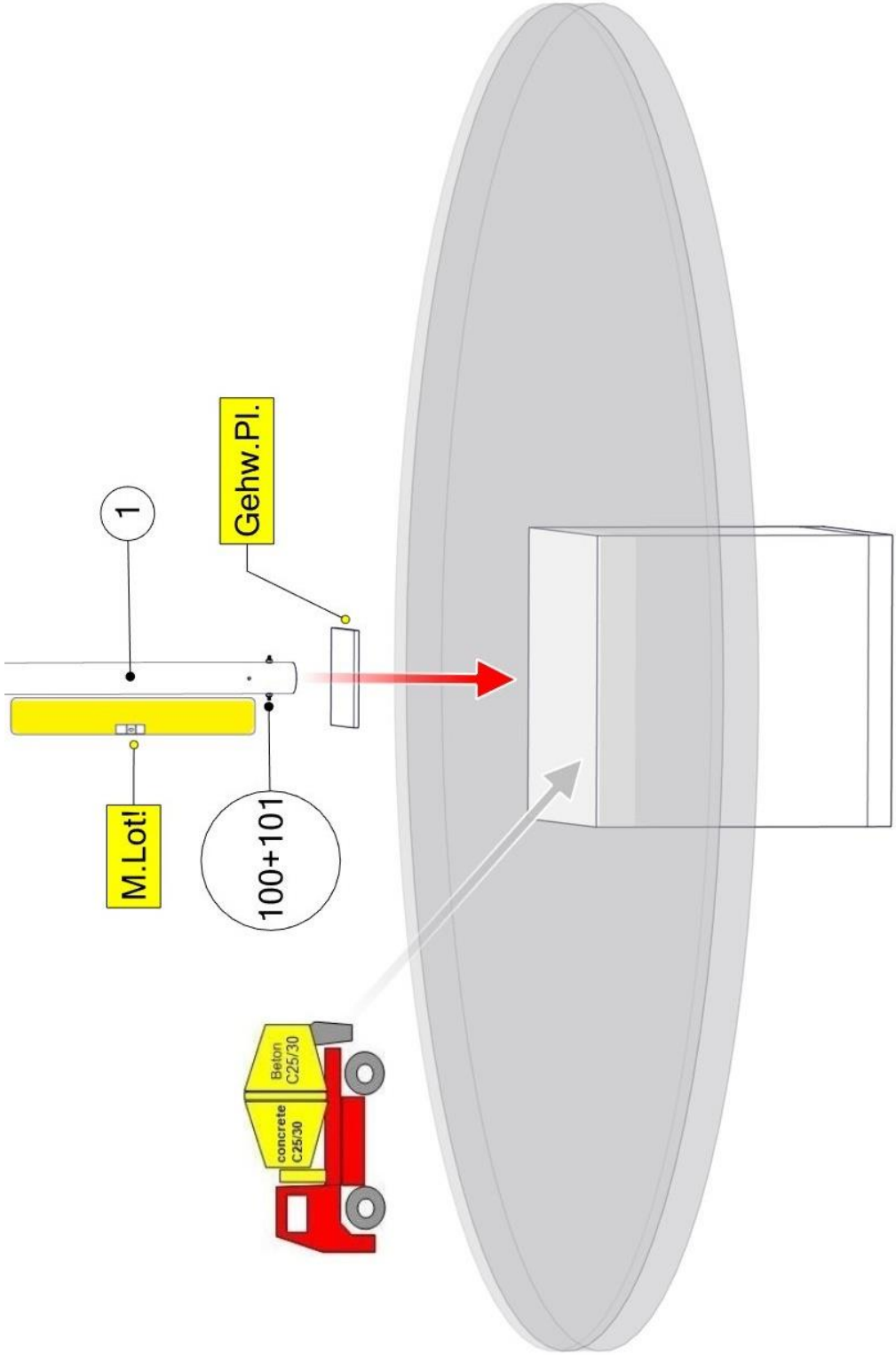
M.Lot!
1
100+101
Gehw.Pl.
concrete
C25/30
Beton
C25/30

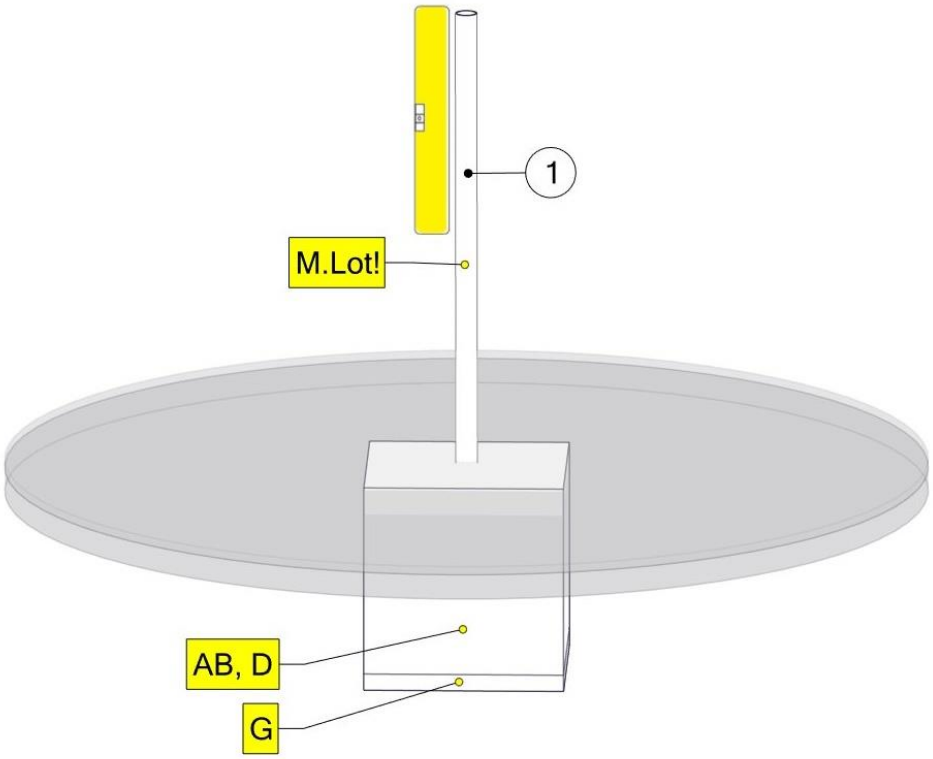
1
M.Lot!
AB, D
G

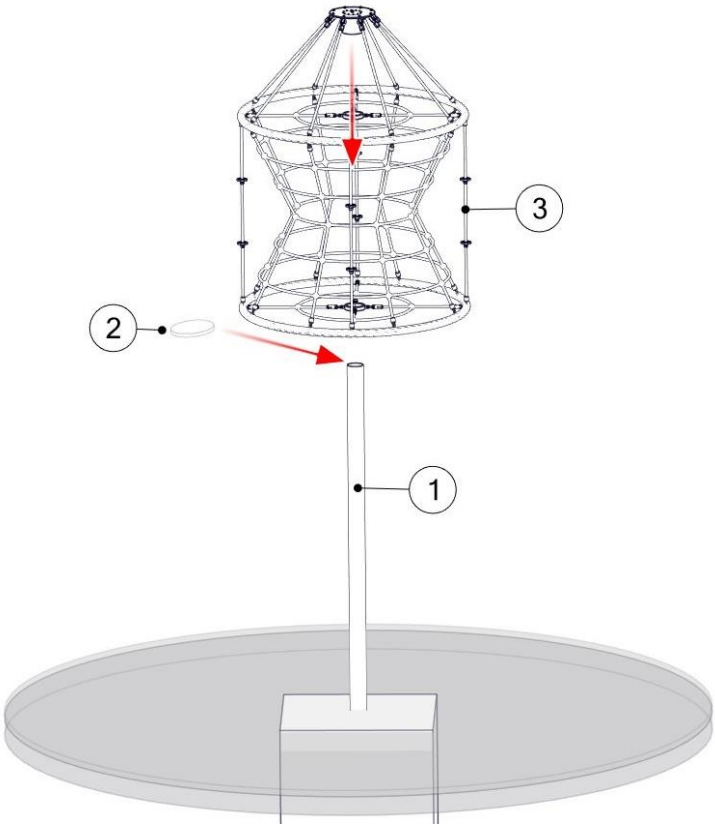
3
2
1

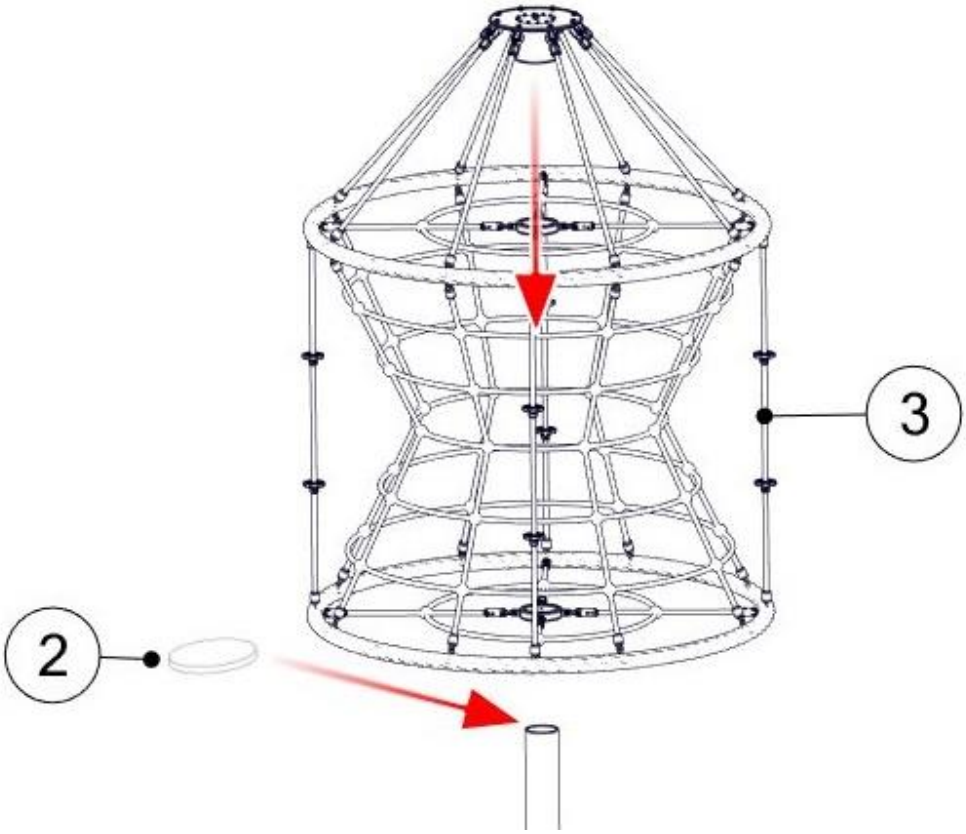
3
2

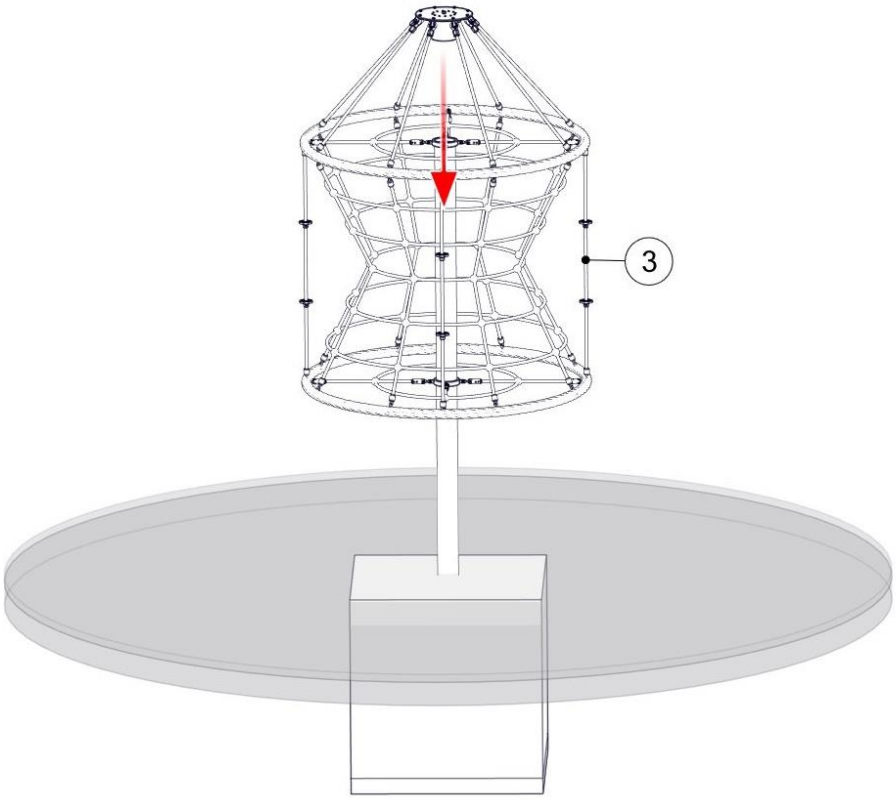
3

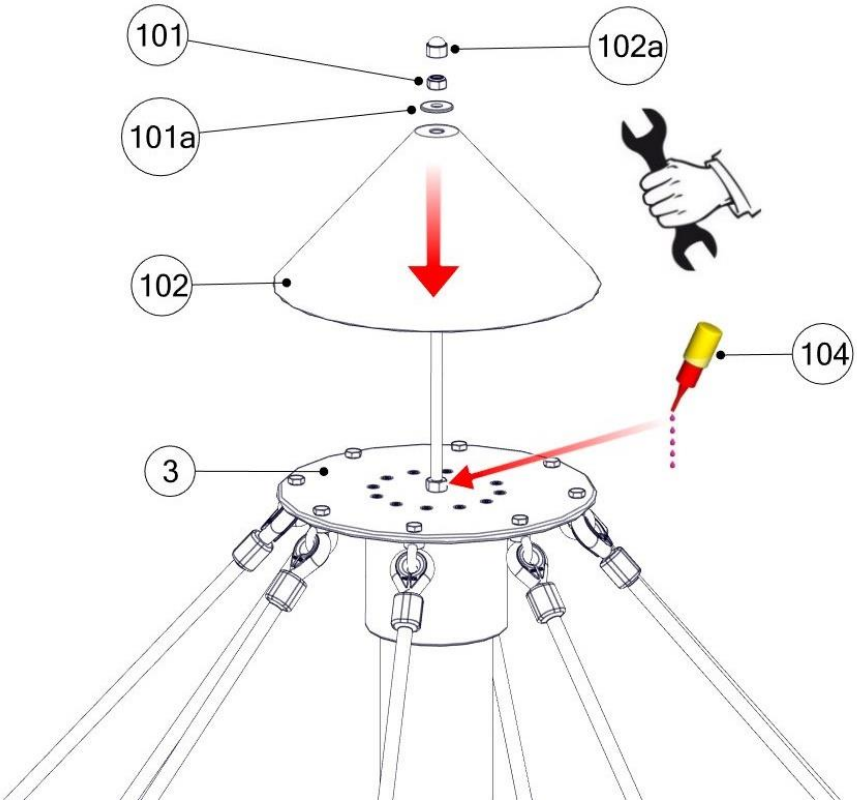
101
102a
101a
102
104
3

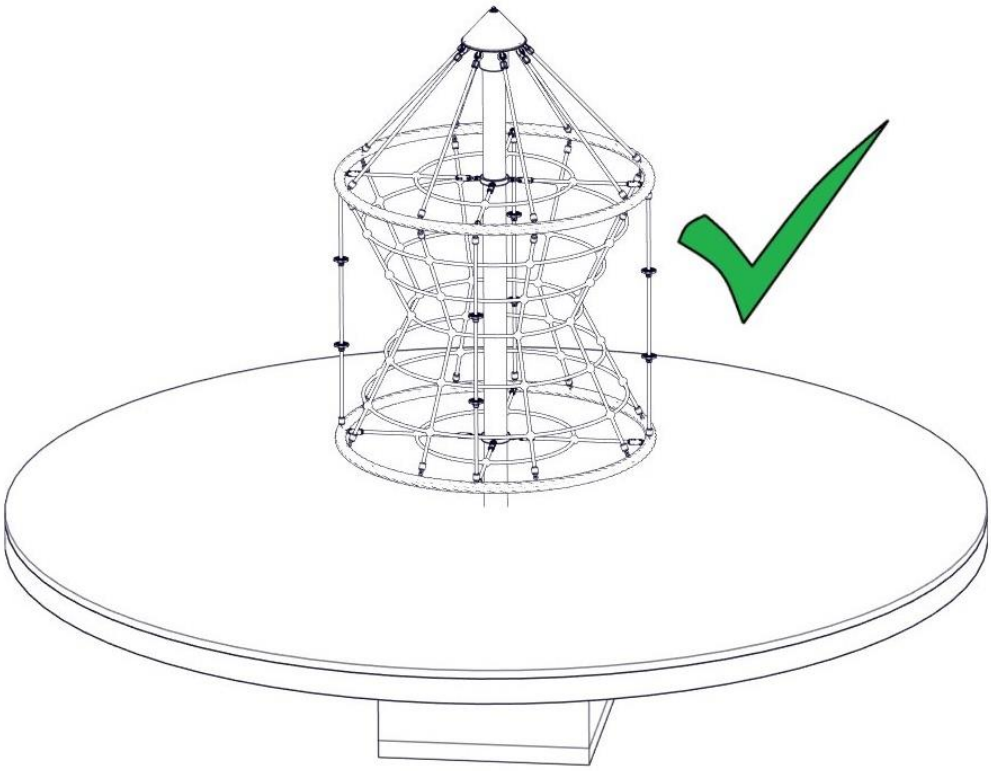

	Abreviations for Mini Hour Glass
M.Lot !!	Install post vertically level
AB	Setting time at least 7-8 days
D	Concrete C25/30 (for foundations)
G	Drainage
Gehw.Pl. ⚠	Sidewalk flagstone (by the customer)! Upper edge – drainaget (see drawing)
F	Fall protection
EBT	Egg depth
O.K	Upper edge of playing level
PS	Safety area
⚠ Attention!	**Round off foundation edges (min.R = 100 mm)! Sizes of fundations are designed for soils class "4-5" (natural ground).** **Soil class 4: soft to medium plasticity, interleave bound, with minor portion of stone (portion < 30% with bigger diameter of 63 mm grain size).** **Soil class 5 : ground with soil class 3 and 4 with big portion of stones (portion > 30% with bigger diameter of 63 mm grain size).** **In case of sandy and soft soils, the surface measure of foundations have to be enlarged for about 50%!**

See drawings for details of shortcuts

4 Post installation checks

Notice

If the equipment has not been installed safely, you must ensure that the public is prevented from using it.

4.1 Marking filler depth

- Labelling the posts to show the depth of material provided as fall protection (i.e. loose filler).

4.2 The equipment has not been installed safely in the following cases:

- Installation of equipment is not complete.
- The protective surface has not been installed yet.
- Appropriate maintenance work cannot guarantee operational safety.

4.3 Removal of all assembly aids

- Please make sure that all assembly aids have been removed from the playing area. The equipment must not be approved for use until this check has been carried out.

4.4 Information about inspection of the equipment before it is used for the first time

- There are no special inspection requirements to be met before the equipment is used for the first time.

4.5 Retighten bolts

- After one week of play, please retighten all bolts again. Later upon respective maintenance.

B Maintenance instructions
Mini Hour Glass
Art.4592-20

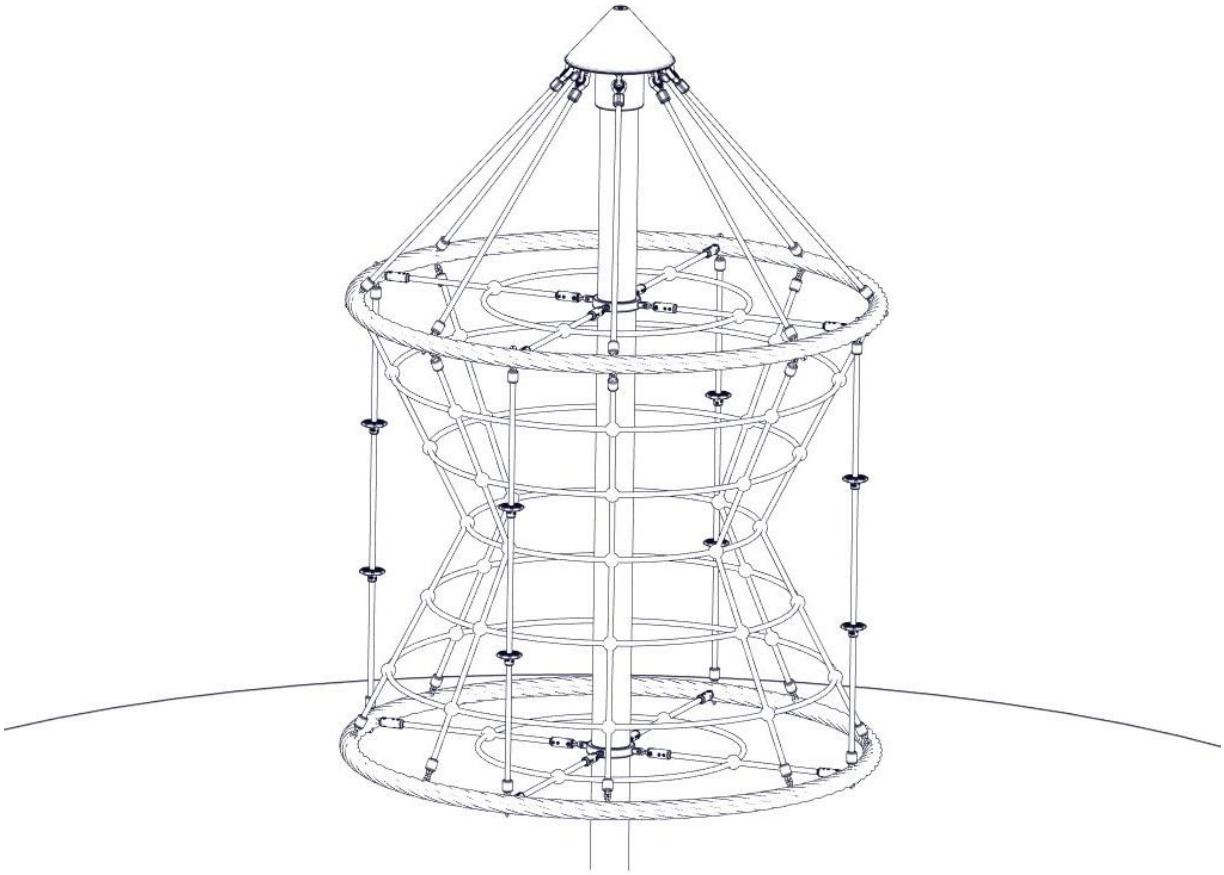

Revision history
Revision 0 – 2012-05-25

The first allowed version

Maiantanance instructions

All rights reserved

© Copyright 2012 Huck Seiltechnik GmbH

5 Introduction Maintenance

5.1 General informations

This equipment should be installed, inspected, maintained and operated in accordance with EN 1176-7 guidelines.

Notice

Please note: Providing any necessary repairs are carried out, a piece of play equipment that is inspected regularly cannot become so damaged that it is dangerous.

Any spare parts which may be required can be obtained directly from your supplier.

Attention

This equipment should only be assembled, maintained and repaired by **persons with the necessary expertise**.

A copy of the inspection record should be given to the operator, who must confirm receipt.

This maintenance instruction is based on the standard

“EN 1176-1:2017”.

6 General maintenance information

6.1 Maintenance intervals

Maintenance intervals are based on average use. Please note that more frequent inspections and/or maintenance are required if the play equipment is subject to intensive use.

6.2 Inspection frequency

The frequency of inspections must be based on actual use. Factors that affect frequency include vandalism, location (e.g. coastal proximity), air pollution and the age of the equipment.

6.3 Maintenance products and procedures

All nuts and bolts are hot-dip galvanised or stainless steel. One of the characteristics of stainless steel is that uncontrolled cold welding may occur when the nuts are tightened. To prevent this, it is necessary to spray the nuts and bolts with Teflon spray or another similar lubricant.

6.4 Spare parts

All spare parts must conform to the manufacturer’s specifications.

6.5 Identifying spare parts

All spare parts are listed in the parts list. The parts list follows the installation requirements.

6.6 Special instructions for the disposal of individual equipment components

No special instructions are necessary.

6.7 Special measures during the break-in period

No later than 2 weeks after assembly, all screwed connections should be checked and tightened if necessary.

6.8 Maintenance of protective surfaces

Surfaces providing fall protection must also be maintained regularly. It is particularly important to maintain the correct level of loose surface material and add more if necessary.

6.9 Faults

Damages must be repaired as soon as they are detected. If serious defects that affect the safetyness cannot be repaired straight away, the playground item must be blocked with immediate effect.

6.10 Loose screws

Loose screws always cause quality problems and put safety at risk. Therefore, loose screws should always be tightened and checks carried out to ensure that there are no missing screws.

6.11 Preventing equipment use

Use of the equipment should be prevented in the event of incomplete installation, disassembly, maintenance, repairs and faults.

6.12 Claims/liability for faults (steel poles)

Steel posts and footings are covered by our guarantee if refular maintenance is carried out and recorded in writing.

Our general terms and conditions apply. Maintenance of steel poles first takes place after 3 years. The steel posts must be excavated down to the concrete foundations and checked for corrosion.

Zinc paint should be applied to any corroded areas and scratches.

Check ropes for abrasion, replace ropes where coating is damaged down the Steel inlet.

7 Maintenance timetable

7.1 Special advices

7.1.1 Maintenance interval

We strongly advise you to carry out inspections and maintenance work within the specified periods as use of the equipment, the weather and malicious vandalism cause wear and tear that compromises the safety and function of the equipment.

7.1.2 Maintenance intervals in the event of intensive use

Please note that more frequent inspections and/or maintenance are required if the play equipment is subject to intensive use.

7.1.3 Faults that compromise safety

Notice	In the event of a fault that compromises safety, quick action must be taken. This may involve repairing it immediately or shutting down and dismantling the equipment.

7.1.4 Faults that compromise function

Notice	Faults that compromise function should also be repaired immediately. Such faults lower the value of the equipment to the user and encourage malicious vandalism, which may render the equipment less safe. Any damage should also be repaired immediately.

8 Regular maintenance

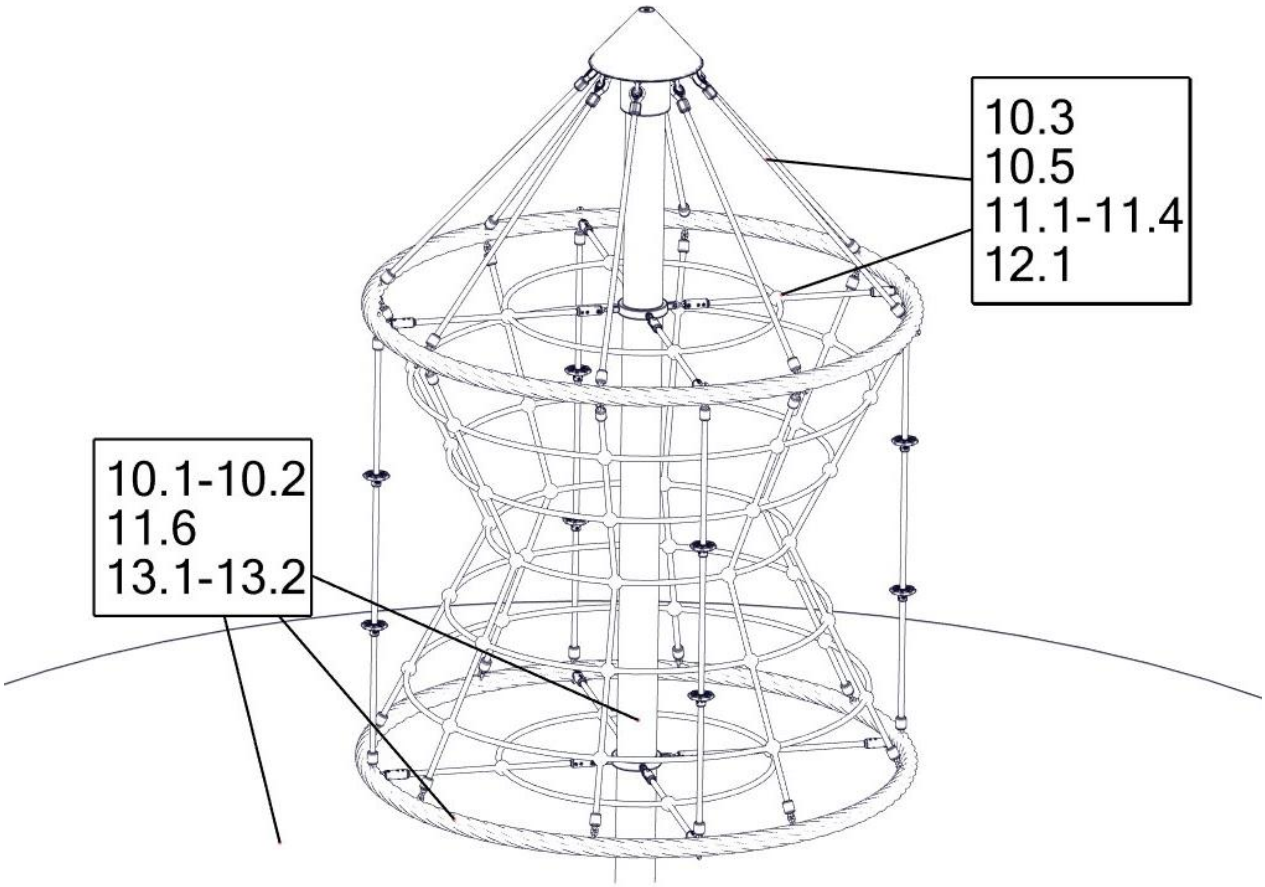

9 Monthly maintenance

9.1 **Check the spaces between the equipment and the ground (clearance and height of fall).**

9.2 **Check the ground surface of fall protection for hard objects and loose foundations.**

9.3 **Check all connecting elements and fittings for wear and tear and tighten if necessary. Replace damaged or missing parts.**

9.4 **Check that moving metal parts (joints, springs, etc.) move smoothly and are not worn. Replace if necessary. It is not necessary to lubricate joints as we only use maintenance-free metal roller bearings.**

9.5 **Check all attachments such as chains, ropes, nets, etc. for damage and replace if necessary.**

9.6 **Check rubber parts, sleeves, etc. for wear and tear or damage and replace if necessary.**

9.7 **If necessary, remove excess padding material from the post footings due to danger of rotting.**

9.8 **Check the surface of wooden parts for damage caused by the weather or external influences and mould. Repair or replace if necessary.**

9.9 **Check the surface of plastic and metal parts, e.g. slides, for damage and replace if necessary.**

10 Quarterly maintenance

10.1 **Detailed inspection of the operation and stability of the equipment paying particular attention to any wear and tear.**

10.2 **Tighten all forms of attachment.**

10.3 **Repaint and retreat surfaces.**

10.4 **Maintenance of fall protection surfaces.**

10.5 **Lubrication of joints.**

10.6 **Check height of fall protection material and top up with loose filler if necessary. If the posts are labelled, top up to the mark.**

10.7 **Retighten all bolts.**

11 Half yearly maintenance

11.1 **The stability of supporting posts, supports, foundations etc. has to be checked. The safety level of the entire system has to be checked after repairs have been carried out or additional system components have been installed or replaced.**

Attention

Annual Maintenance

12 Annual maintenance

12.1 Ascertaining that the equipment, foundations and surfaces are safe for operation.

12.2 In particular, the equipment should be checked for decay and corrosion. It may be necessary to dig out or excavate certain components in order to do so. Zinc paint should be applied to corroded areas and scratches.

Attention

The equipment must be inspected by someone **with the necessary expertise** in strict compliance with the instructions issued by Huck Seiltechnik GmbH.

A copy of the inspection record should be given to the operator, who must confirm receipt.

13 Maintenance printout

Name of item: Mini Hour Glass_____ / Art. No. 4592-20 _____

Location: _____

Customer or operator: _____
(Town, Town council, Kindergarten)

Date of inspection	Inspector	O.K.	Accessible	Barriered	Defects	Repaired by	Date

Please copy and return once a year after main inspection has been carried out to the manufacturer by Telefax +49(0)6443/ 83 11 79!
Place the confirmation form in the play equipment files.

14 Hand over document

After the installation of the equipment pass the installation and maintenance documents to the operator. The operator has to receive the hand over documents. The complete filled and signed hand over document should be sent to the supplier.

Art.-No.: 4592-20

Type of item: Mini Hour Glass

Serial number: _____

Customer or operator (Town, Town council, Kindergarten, etc.):

_____

_____

Competent person in charge:

_____

_____

Installation company (address):

_____

_____

Responsible assistant (assembler):

_____

_____

Received the complete assembly instructions, maintenance instructions and maintenance printout .

_____

(Signature of operator) (Signature of installation company)
(Stamp)

Date: _____