A Assembly Instructions
Net see-saw Art.-No. 4587S

Attention! Only use the assembly instructions included in the scope of delivery for the assembly, installation and maintenance of the respective equipment!

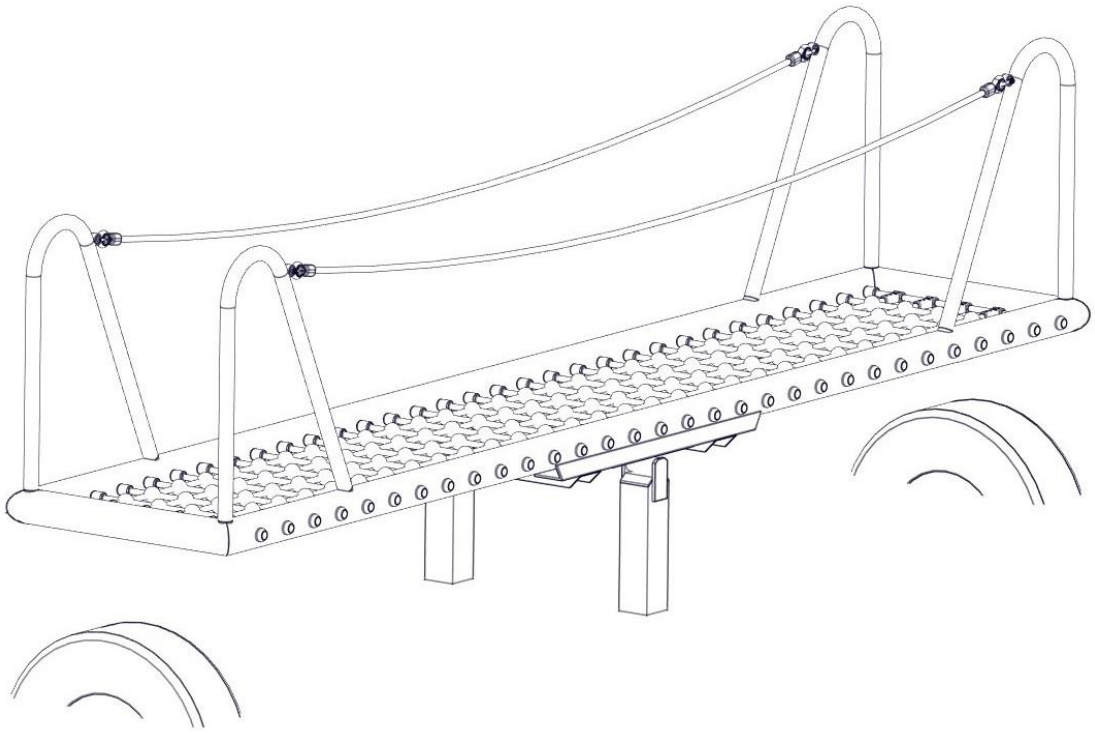

Operator: _____

Location: _____

Revision 0 – 2016-08-16

Erste freigegebene Version

Montageanleitung FH

Revision 4 – 2023-01-16

Neue form der Anleitung ZM

Alle Rechte vorbehalten

© Copyright 2016 Huck Seiltechnik GmbH

Please note the explanations and abbreviations and notes.
For any queries please contact the manufacturer

Contents

A Assembly Instructions Net see-saw Art.-No. 4587S 1
1 Introduction Assembling 4
2 Datasheet: Net see-saw Art.-No. 4587S 5
3 Delivery contents (parts list with part numbers) 9
4 Post installation checks 19
B Maintenance instructions Net see-saw, Art.-No. 4587S 21
5 Introduction Maintenance 23
6 General maintenance information 24
7 Maintenance timetable 26
8 Regular maintenance 27
9 Monthly maintenance 28
10 Quarterly maintenance 28
11 Half yearly maintenance 29
12 Annual maintenance 29
13 Maintenance printout 31
14 Hand over document 33

List of Tables

Table 3-1: Delivery contents, in words 9
Table 3-2: Delivery contents, in symbols 10

1 Introduction Assembling

1.1 General information

This equipment should be installed, inspected, maintained and operated in accordance with EN1176-7 guidelines.

Before installation work commences, please check that you have all of the equipment and fixation components in the parts list provided (see Tables 3-1 and 3-2).

Please consider that the installation has to be carried out only on even terrain (max.slope up to 3%).

Any spare parts that may be required can be obtained directly from your supplier or from Fa. Huck Seiltechnik GmbH

Adress: Huck Seiltechnik GmbH
Dillerberg 3
D-35614 Aßlar/Berghausen
Tel. +49 6443 83 11-0
Fax +49 6443 83 11-79

Please do not hesitate to call your supplier if you have any problems during installation or with any other questions. You can reach us at the following **Tel. +49 6443 83 11-0.**

	Following installation, complete assembly instructions, maintenance instructions and a maintenance record must be sent to the operator who must confirm receipt in writing. See the last page of this document.
	All nuts and bolts are hot-dip galvanised or stainless steel. One of the characteristics of stainless steel is that uncontrolled cold welding may occur when the nuts are tightened. To prevent this, it is necessary to spray the nuts and bolts with Teflon spray or another similar lubricant.
	We recommend a flush transition from the fall protection material (minimum space) to the next, adjoining area. Avoid edgings with curbs or metal edges without damping properties.

We hereby confirm that this play equipment has been tested and certified in accordance with the play equipment standard EN 1176-1.

2 Datasheet: Net see-saw Art.-No. 4587S

1. Space requirement: 4.35 m x 0.80 m
   Safety zone: 7.35 m x 3.80 m
   Heigth of equipment: 1.40
   Height of fall: ≤ 1.16 m
   Fall protection area: 26 m²

2. Required safety surface:

Surface material	Description mm	Minimum thickness of layer mm	Maximum height of fall mm
Topsoil grass			**<= 1000**
Chipped bark	**20 – 80 grain size**	**300** **400**	<= 2000 **<= 3000**
Wood chippings	**5 – 30 grain size**	**300** **400**	<= 2000 **<= 3000**
Sand	**0,2 – 2 grain size**	**300** **400**	<= 2000 **<= 3000**
Gravel	**2 – 8 grain size**	**300** **400**	<= 2000 **<= 3000**
Other ground materials	**As recommended by manufacturer**		**Critical fall height as checked**

Name and overall dimension of the largest component:
steel post (1 piece) length 4200 mm, Ø 101,6 x 2,9 mm
Name and weight of the heaviest component:
steel post (1 piece) ~115 Kg
Intended age group: 3 years

Attention

Please note that this equipment is set in concrete.
Concrete: C25/30
Required concrete: 0,80 m^3
Foundations/area to be excavated:
excavated (All foundations must be brought to equal level!)

Aushubgröße:
1 x 1,20 m lang x 1,30 m breit, Gesamttiefe 0,80 m inkl. 10 cm Sickerschicht.
2 x 0,35 m lang x 0,80 m breit, Gesamttiefe 0,52 m inkl. 10 cm Sickerschicht.

Fundamentgröße:
1 x 1,20 m lang x 1,30 m breit, Höhe 0,60 m (45°)

Attention

Foundation edges must be rounded off (min.R = 100 mm)!
Sizes of fundations are designed for soils class"4-5" (natural ground).
Soil class 3: Non-cohesive to low-cohesive plasticity, sand, gravel and sand-gravel-mixtures, with very low portion of stones portion of stones (portion > 30% with bigger dia-meter of 63 mm grain size)
Soil class 4: soft to medium plasticity, interleave bound, with minor portion of stone (portion < 30% with bigger diameter of 63 mm grain size)
Soil class 5: Soil class 5: ground with soil class 3 and 4 with big portion of stones (portion > 30% with bigger diameter of 63 mm grain size)
IN CASE OF SANDY AND SOFT SOILS, THE SURFACE DIMENSIONS OF FOUNDATIONS HAVE TO BE ENLARGED FOR ABOUT 50%!.

Assembly time, once foundations complete:
After completion of concrete foundations approx. 7 hours
Required assistance: 3 persons.
Required tools: wheel excavator or similar with a lifting height of approx. 4 m height ladder approx. 4 m long,
spirit level, various wrenches and screwdriver.

Any spare parts which may be required can be obtained directly from your supplier or from
Fa.Huck Seiltechnik GmbH

Adress: Huck Seiltechnik GmbH
Dillerberg 3
D-35614 Aßlar/Berghausen
Tel. +49 6443 8311-0
Fax +49 6443 8311-79

We hereby confirm that this item of play equipment has been tested and certified in accordance with the play equipment standard EN 1176.

Drawings / Views

All optical drawings are showing only the measurements/dimensions and are no mandatory technical views of the complete item.

We reserve the right to change technical details of our articles which are serving for the further development of our articles and are reasonable for the customer.

Measurement tolerances

Because of the properties and characteristics of the components, minor measurement tolerances compared to the indication on the sketches are possible.

This concerns all shown measurements except the foundation measurements resp. measurements below upper edge ground level/play area.

	Abbreviations
AB	The legally prescribed setting periods must be observed!
D	C25 / 30 concrete for foundations
Det	Detail
ER	Soil / ground
F	Fall protection 300 mm (+ 100 mm Soil)
G	Drainage layer
O.K	upper edge of the playing level
VO	Pre-assembled
PS	security area
SBv	Connect the shackle to the socket
M.Lot !!	The mast / post must be set up vertically!
n.d.Mont. !	After mounting the rocker, the struts must be removed!
vd	condense
	**Foundation edges must be rounded off (min.R = 100 mm** **Sizes of fundations are designed for soils class“4-5” (natural ground).** **Soil class 3:** Non-cohesive to low-cohesive plasticity, sand, gravel and sand-gravel-mixtures, with very low portion of stones portion of stones (portion > 30% with bigger diameter of 63 mm grain size) **Soil class 4:** soft to medium plasticity, interleave bound, with minor portion of stone (portion < 30% with bigger diameter of 63 mm grain size) **Soil class 5:** Soil class 5: ground with soil class 3 and 4 with big portion of stones (portion > 30% with bigger diameter of 63 mm grain size) **IN CASE OF SANDY AND SOFT SOILS, THE SURFACE DIMENSIONS OF FOUNDATIONS HAVE TO BE ENLARGED FOR ABOUT 50%!.**

see drawings!

3 Delivery contents (parts list with part numbers)

3.1. In words

Table 3-1: Delivery contents, in words

Pos.	Quantity	Element / Description	Size	O.K.	Mis-sing
1	1	Steel post with rocker Mechanics pre-assembled	1,20 m long		
2	1	See-saw	4,20 m long		
100	2	Truck tires	Ø ca. 750 mm		
101	8	Hexagon screw	M12 x 40 mm		
102	8	Washers f. the carriage bolts pre-assembled	für M12		
103	1	Loctite			

3.2. In symbols

Table 3-2: Delivery contents, in symbols

Pos.	Quanti-ty	Symbol
1	1	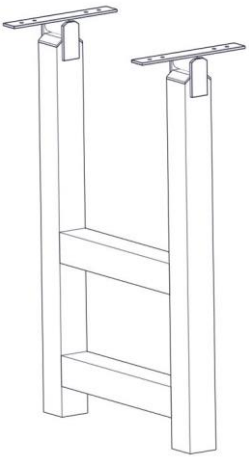 Steel post with rocker mechanism
2	1	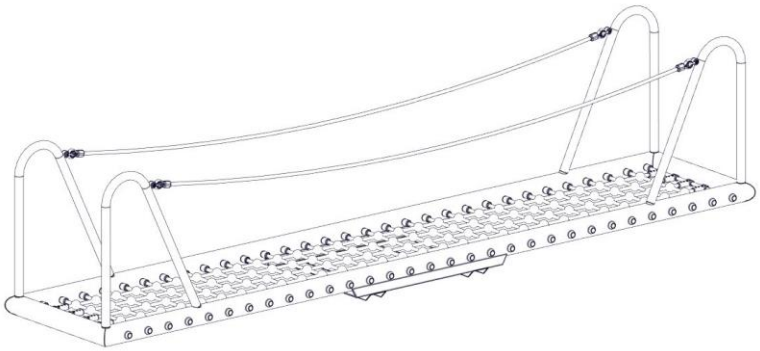 See-saw 4,20 m, long (**VO)**
100	2	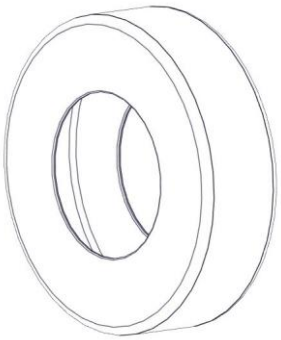 Tires Ø 750 mm

Table 3-2: Delivery contents, in symbols

Pos.	Quanti-ty	Symbol
101	8	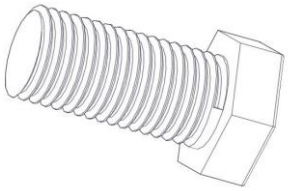 hexagon bolts M12 x 40 mm
102	8	 Washer for M12
103	1	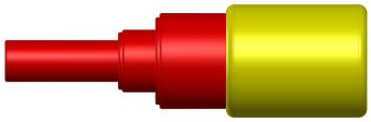 Loctite

HUCK Seiltechnik GmbH • Dillerberg 3 • D-35614 Asslar-Berghausen
seiltechnik@huck.net - www.huck.net

Screw locking device!

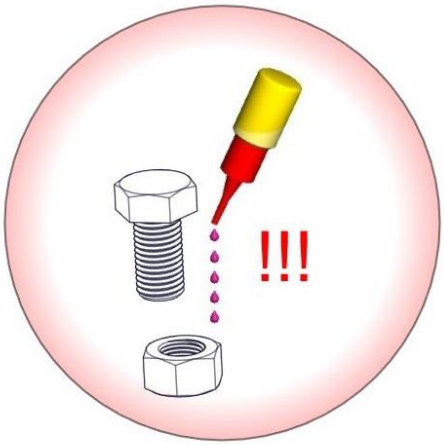

Glue all screws, nuts and sleeves with loctite.
(not less than 5 drops!)
(except for lock nut)

Assembly instructions

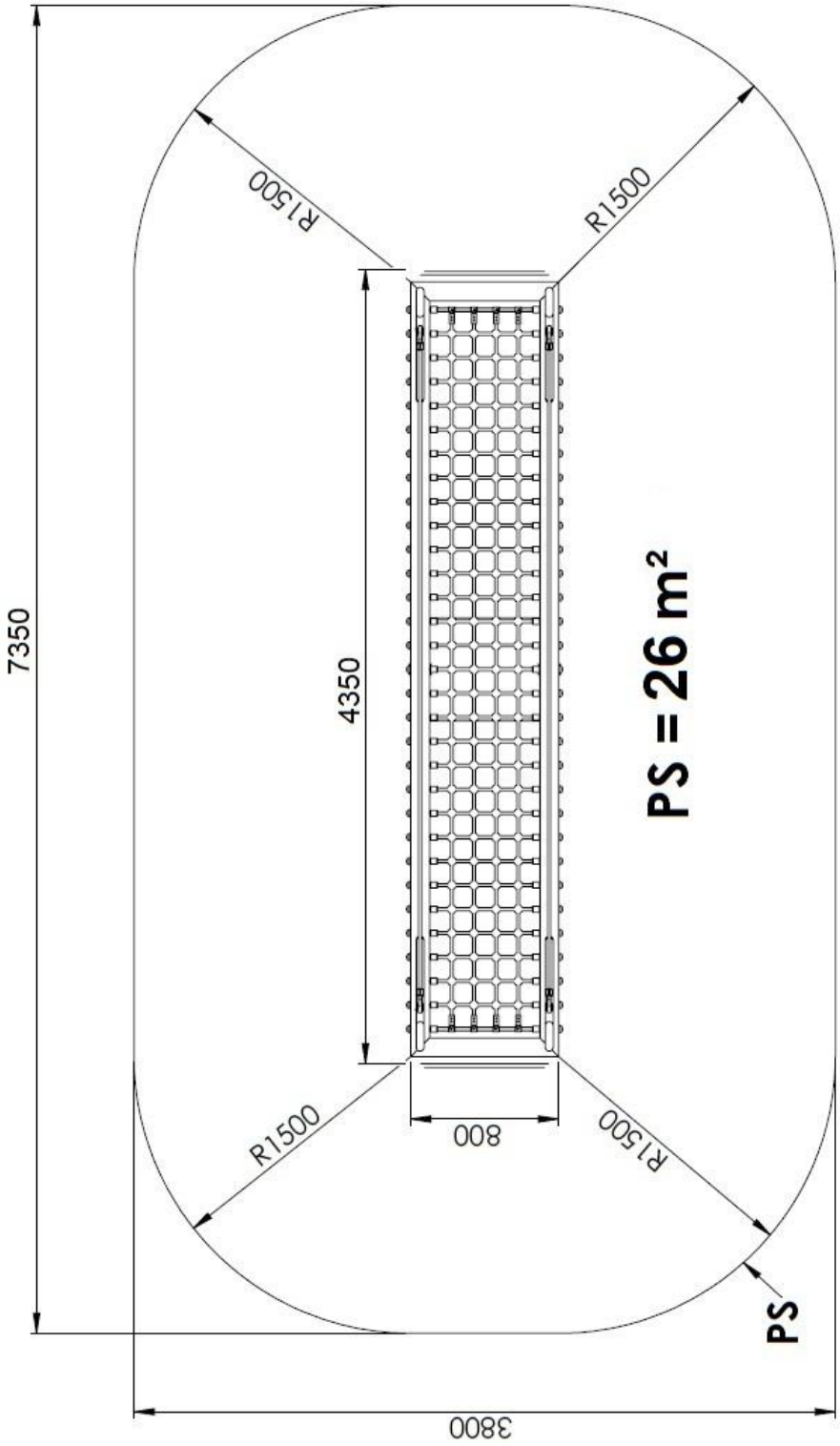

HUCK Seiltechnik GmbH • Dillerberg 3 • D-35614 Asslar-Berghausen
seiltechnik@huck.net - www.huck.net

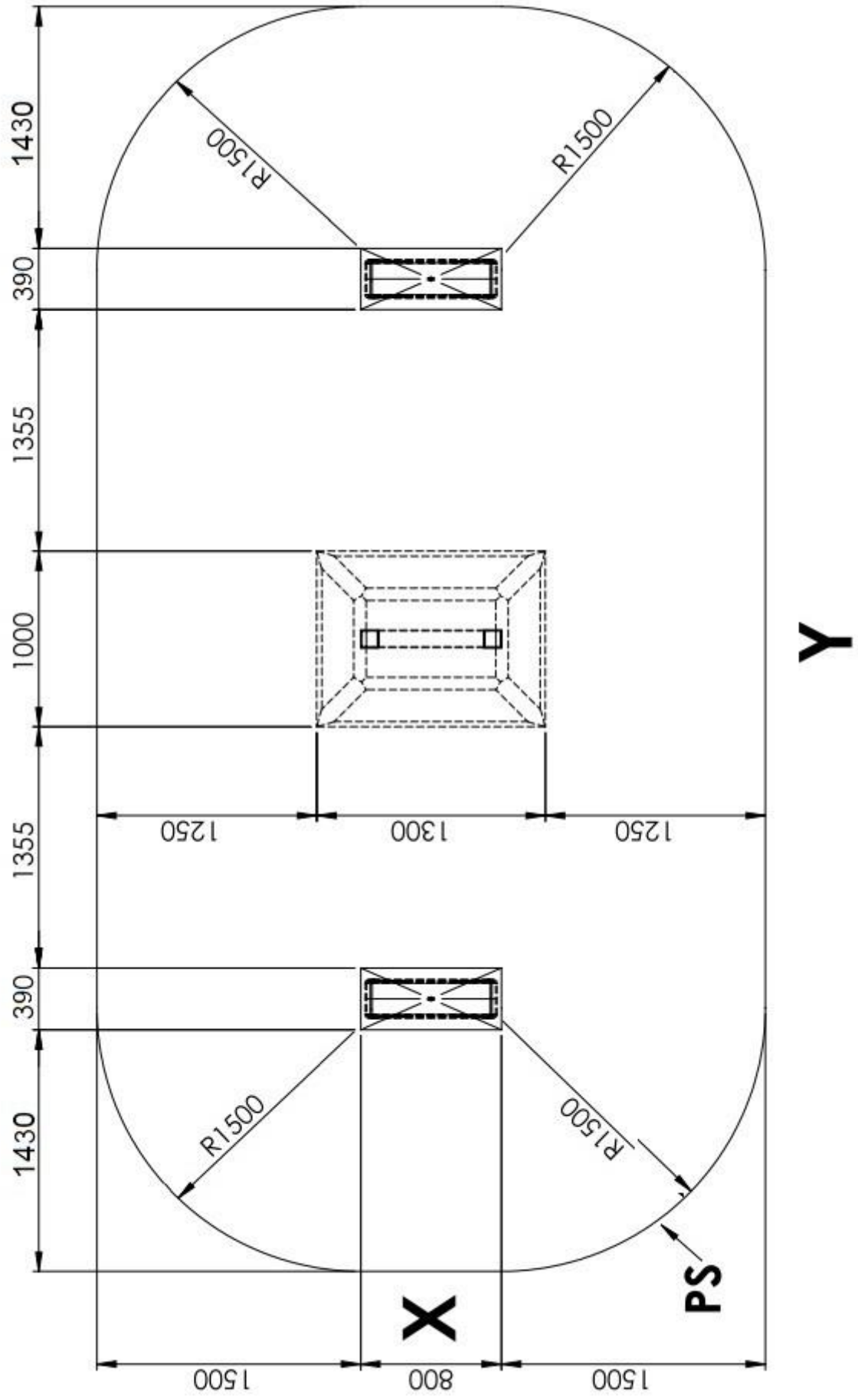

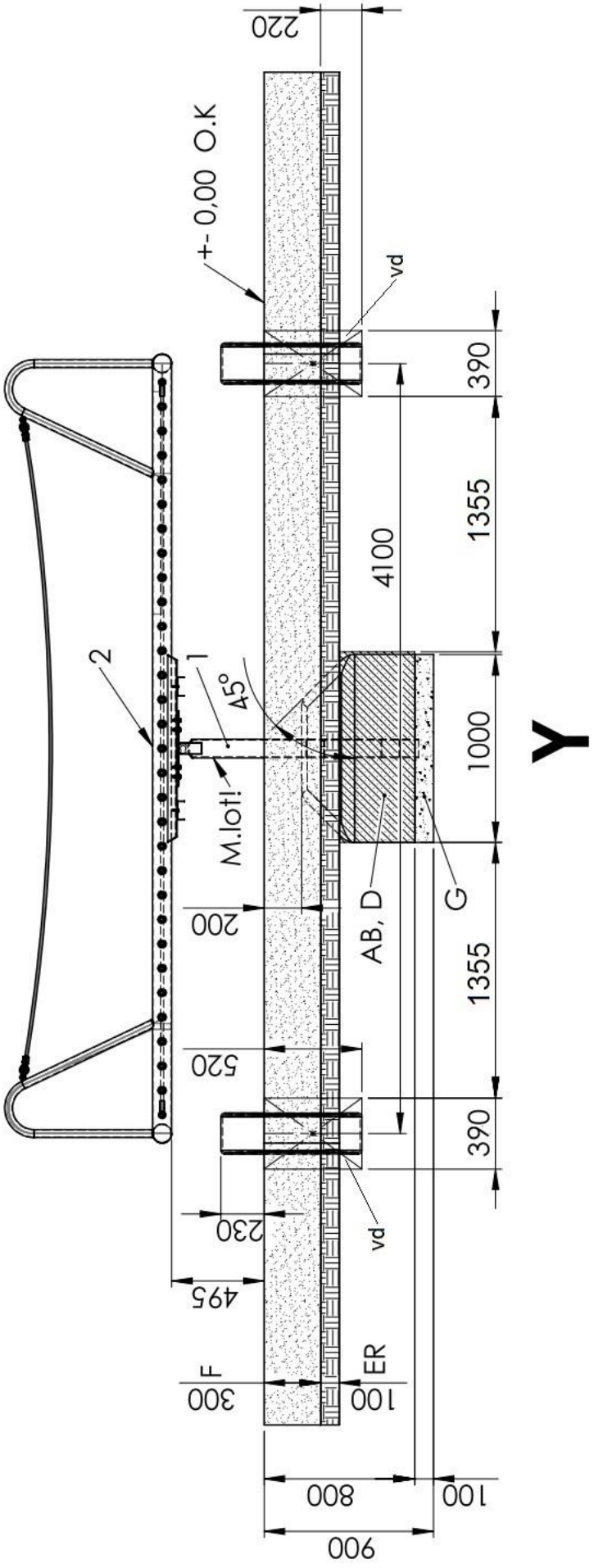
220
+- 0,00 O.K
vd
390
1355
4100
1000
Y
2
1
45°
M.lot!
200
AB, D
G
1355
520
390
230
vd
495
F
300
ER
100
800
100
900

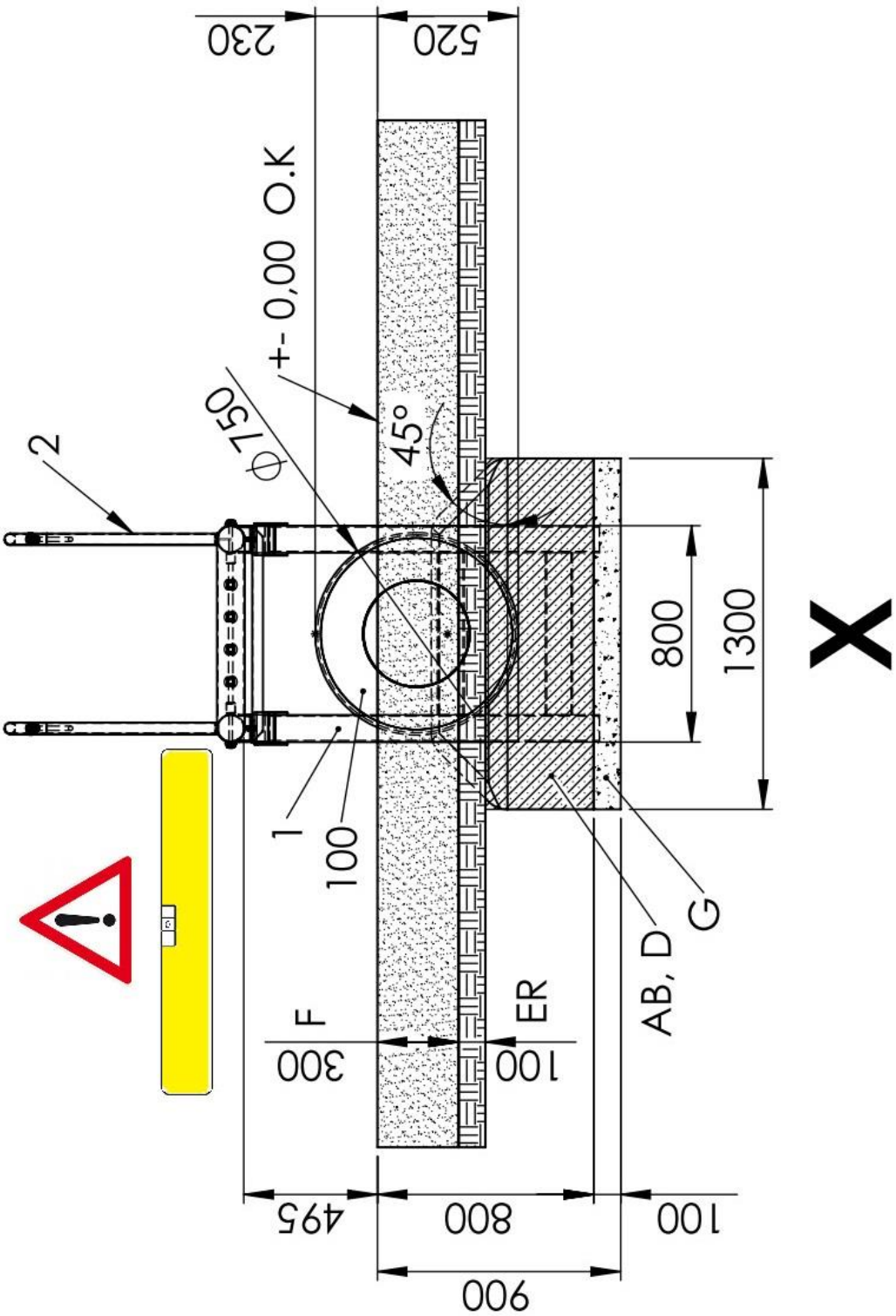
230
520
+- 0,00 O.K
Ø750
45°
2
800
1300
X
1
100
AB, D
G
F
ER
300
100
495
800
100
900

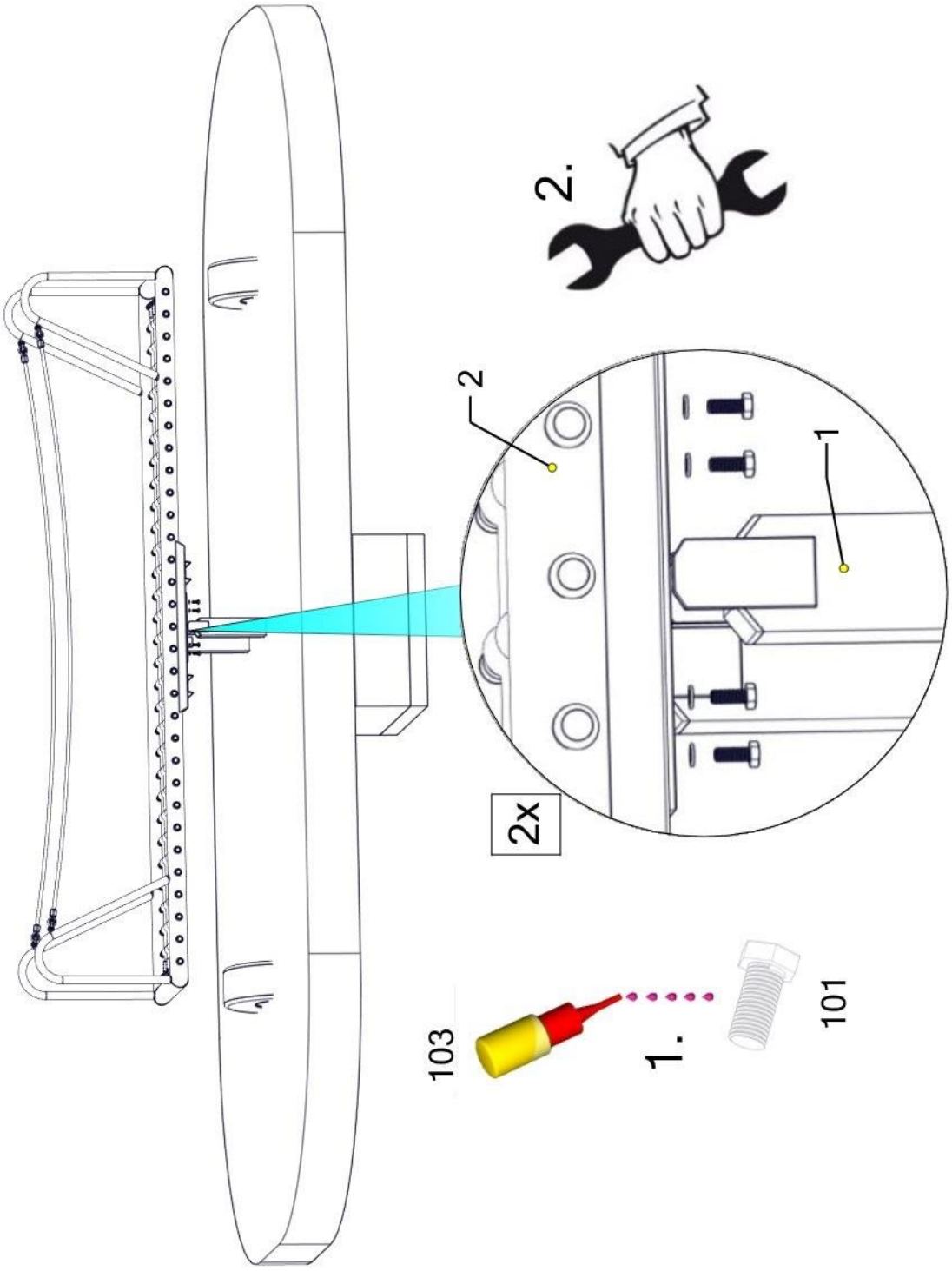
2.
2
1
2x
103
1.
101

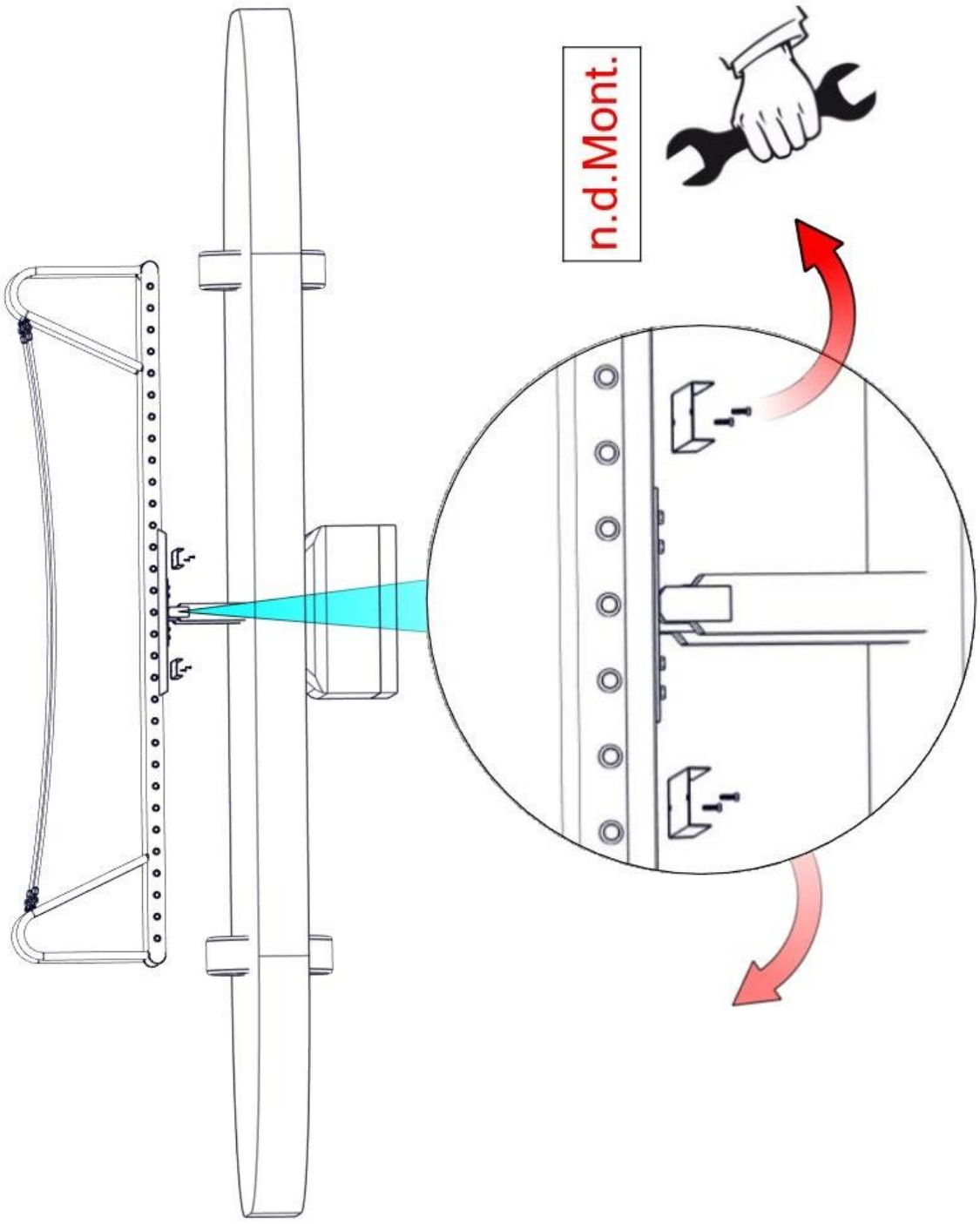
n.d.Mont.

Post installation checks



If the equipment has not been installed safely, you must ensure that the public is prevented from using it.

3.1 Marking filler depth

Labelling the posts to show the depth of material provided as fall protection (i.e. loose filler).

3.2 The equipment has not been installed safely in the following cases:

- Safe equipment installation is not complete.
- The protective surface has not been installed yet.
- Appropriate maintenance work cannot guarantee operational safety.

3.3 Removal of all assembly aids

Please make sure that all assembly aids have been removed from the playing area. The equipment must not be approved for use until this check has been made.

3.4 Information about inspection of the equipment before it is used for the first time

There are no special inspection requirements to be met before the equipment is used for the first time.

3.5 Retighten bolts

After one week of play, please retighten all bolts again. Later upon respective maintenance.

.

B Maintenance instructions
Net see-saw, Art.-No. 4587S

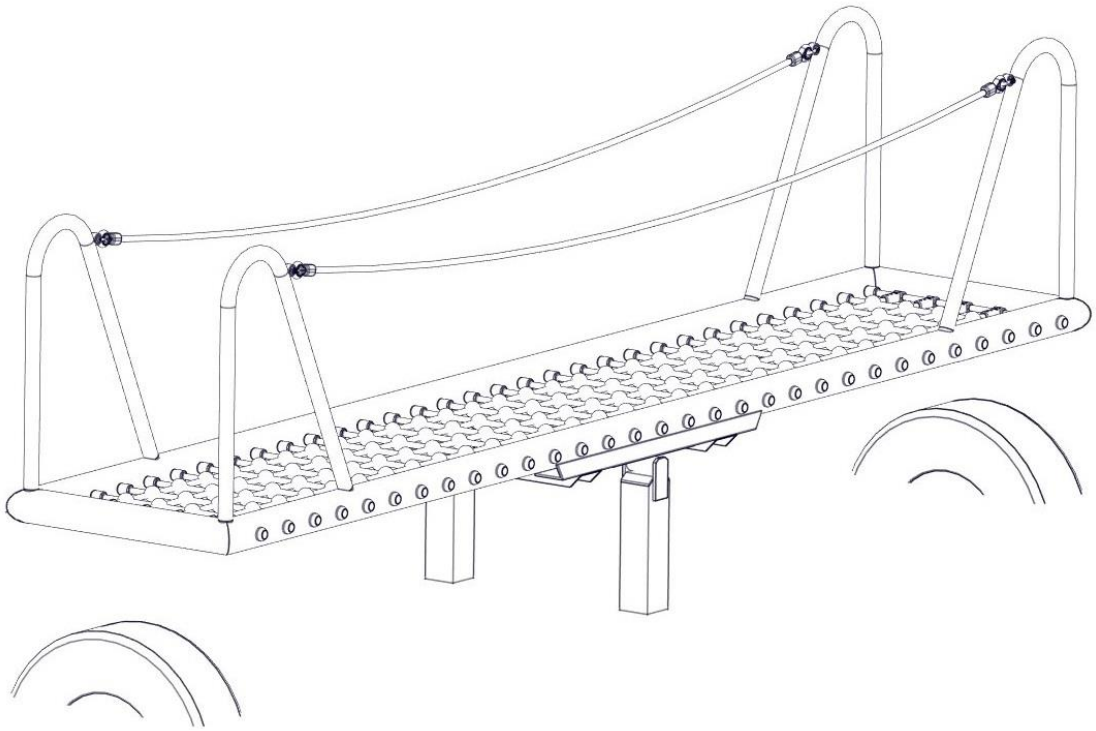

Revision 0 – 2016-08-16
Erste freigegebene Version
Montageanleitung FH
Revision 4 – 2020-12-09
Neuer Sicherheitsbereich FH
Alle Rechte vorbehalten
© Copyright 2016 Huck Seiltechnik GmbH

4 Introduction Maintenance

4.1 General informations

This equipment should be installed, inspected, maintained and operated in accordance with EN 1176-7 guidelines.



Please note: Providing any necessary repairs are carried out, a piece of play equipment that is inspected regularly cannot become so damaged that it is dangerous.

Any spare parts which may be required can be obtained directly from your supplier or from Fa. Huck Seiltechnik GmbH

Adress: Huck Seiltechnik GmbH
Dillerberg 3
D-35614 Aßlar/Berghausen
Tel. +49 6443 83 11-0
Fax +49 6443 83 11-79



This equipment should only be assembled, maintained and repaired by **persons with the necessary expertise**.

A copy of the inspection record should be given to the operator, who must confirm receipt.

This maintenance instruction is based on the standard "EN 1176-1:2017".

5 General maintenance information

5.1 Maintenance intervals

Maintenance intervals are based on average use. Please note that more frequent inspections and/or maintenance are required if the play equipment is subject to intensive use.

5.2 Inspection frequency

The frequency of inspections must be based on actual use. Factors that affect frequency include vandalism, location (e.g. coastal proximity), air pollution and the age of the equipment.

5.3 Maintenance products and procedures

All nuts and bolts are hot-dip galvanised or stainless steel. One of the characteristics of stainless steel is that uncontrolled cold welding may occur when the nuts are tightened. To prevent this, it is necessary to spray the nuts and bolts with Teflon spray or another similar lubricant.

5.4 Spare parts

All spare parts must conform to the manufacturer’s specifications.

5.5 Identifying spare parts

All spare parts are listed in the parts list. The parts list follows the installation requirements.

5.6 Special instructions for the disposal of individual equipment components

No special instructions are necessary for the disposal of individual equipment components.

5.7 Special measures during the break-in period

No later than 2 weeks after assembly, all screwed connections should be checked and tightened if necessary.

5.8 Maintenance of protective surfaces

Surfaces providing fall protection must also be maintained regularly. It is particularly important to maintain the correct level of loose surface material and add more if necessary.

5.9 Faults



Faults must be repaired as soon as they are detected. If serious defects that compromise safety cannot be repaired straight away, the public must be prevented from using the equipment with immediate effect.

5.10 Loose screws



Loose screws always cause quality problems and put safety at risk. Therefore, loose screws should always be tightened and checks carried out to ensure that there are no missing screws (e.g. look out for holes you can see through).

5.11 Preventing equipment use

Use of the equipment should be prevented in the event of incomplete installation, disassembly, maintenance, repairs and faults.

5.12 Claims/liability for faults

Steel posts and footings are guaranteed if regular maintenance is carried out and recorded in writing. Our general terms and conditions apply. Maintenance first takes place after 3 years. The steel posts must be excavated as far as the concrete foundations and checked for corrosion.
Zinc paint should be applied to any corroded areas and scratches. Check ropes for abrasion. Retreat any that are very worn.

6 Maintenance timetable

6.1 Special advices

6.1.1 Maintenance interval

We strongly advise you to carry out inspections and maintenance work within the specified periods as use of the equipment, the weather and malicious vandalism cause wear and tear that compromises the safety and function of the equipment.

6.1.2 Maintenance intervals in the event of intensive use

Please note that more frequent inspections and/or maintenance are required if the play equipment is subject to intensive use.

6.1.3 Faults that compromise safety



In the event of a fault that compromises safety, quick action must be taken. This may involve repairing it immediately or shutting down and dismantling the equipment.

6.1.4 Faults that compromise function



Faults that compromise function should also be repaired immediately. Such faults lower the value of the equipment to the user and encourage malicious vandalism, which may render the equipment less safe. Any damage should also be repaired immediately.

7 Regular maintenance

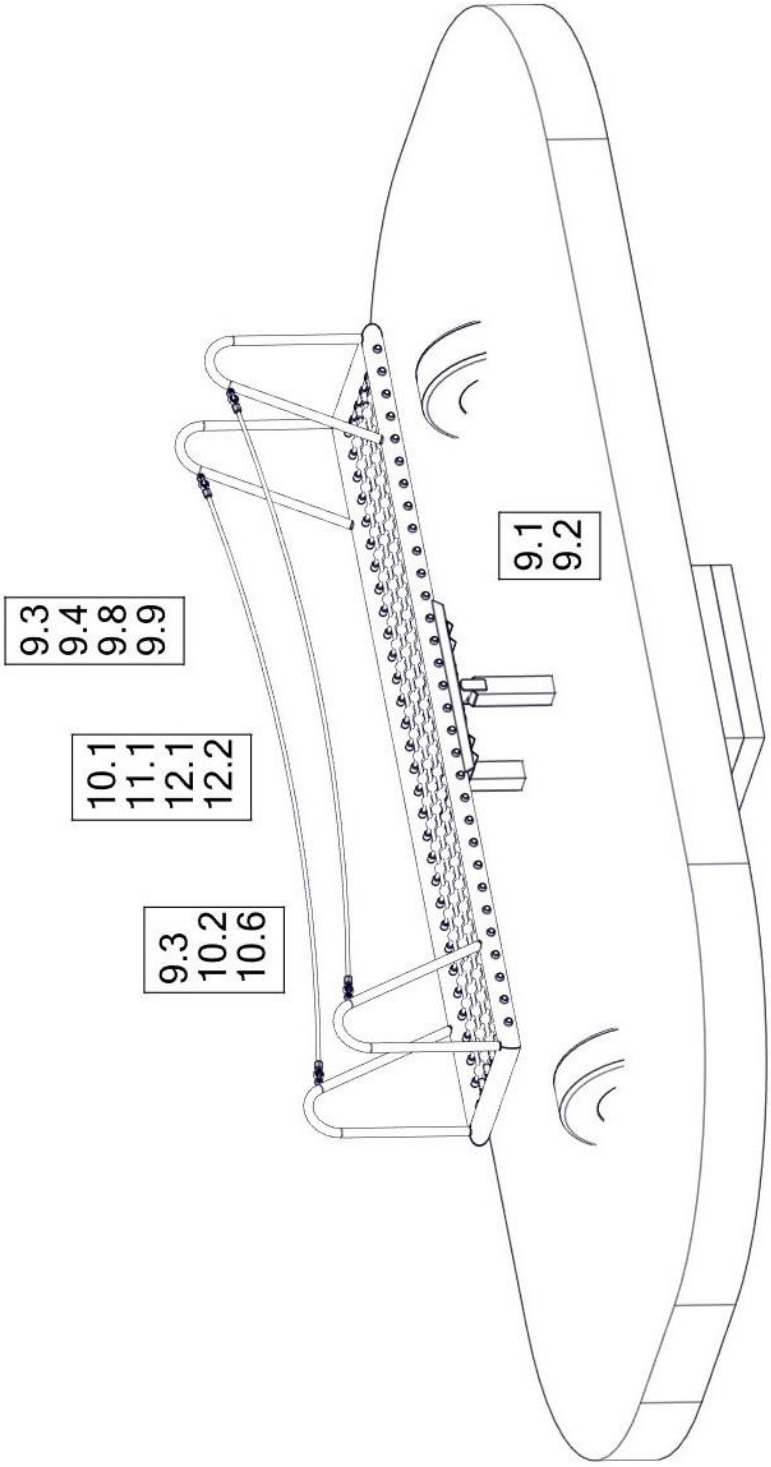

Regular maintenance

8 Monthly maintenance

8.1 Check the spaces between the equipment and the ground (clearance and height of fall).

8.2 Check the ground surface in the area with fall protection for hard objects and loose foundations.

8.3 Check all connecting elements and fittings for wear and tear and tighten if necessary. Replace damaged or missing parts.

8.4 Check that moving metal parts (joints, springs, etc.) move smoothly and are not worn. Replace if necessary. It is not necessary to lubricate joints as we only use maintenance-free metal roller bearings.

8.5 Check all attachments such as chains, ropes, nets, etc. for damage and replace if necessary.

8.6 Check rubber parts, sleeves, etc. for wear and tear or damage and replace if necessary.

8.7 If necessary, remove excess padding material from the post footings due to danger of rotting.

8.8 Check the surface of wooden parts for damage caused by the weather or external influences and mould. Repair or replace if necessary.

8.9 Check the surface of plastic and metal parts, e.g. slides, for damage and replace if necessary.

9 Quarterly maintenance

9.1 Detailed inspection of the operation and stability of the equipment paying particular attention to any wear and tear.

9.2 Tighten all forms of attachment.

9.3 Repaint and retreat surfaces.

9.4 Maintenance of fall protection surfaces.

9.5 Lubrication of joints.

9.6 Check the height of the fall and top up with loose filler if necessary. If the posts are labelled, top up as far as the mark.

9.7 Retighten all bolts

10 Half yearly maintenance

10.1 Stability (check posts, bracing, foundations, etc.). Ascertaining whether there are any changes in equipment safety as a result of repairs that have been carried out or components that have been added or replaced.



Annual Maintenance

11 Annual maintenance

11.1 Ascertaining that the equipment, foundations and surfaces are safe for operation.

11.2 In particular, the equipment should be checked for decay and corrosion. It may be necessary to dig out or excavate certain components in order to do so. Zinc paint should be applied to corroded areas and scratches.



The equipment must be inspected by someone **with the necessary expertise** in strict compliance with the instructions issued by Huck Seiltechnik GmbH.

A copy of the inspection record should be given to the operator, who must confirm receipt.

12 Maintenance printout

Name of item: Net see-saw Art.-No.4587S

Location: _____

Customer or operator: _____
(Town, Town council, Kindergarten)

Date of inspection	Inspector	O.K.	Accessible	Barriered	Defects	Repaired by	Date

Please copy and return once a year after main inspection has been carried out to the manufacturer by Telefax +49 6443 83 11-79
Place the confirmation form in your existing play equipment files.

13 Hand over document



After the installation of the equipment pass the installation and maintenance documents to the operator. The operator has to receive the hand over documents. The complete filled and signed hand over document should be sent to the supplier Huck Seiltechnik GmbH per Telefax +49 6443 8311-79

Art.-No.: 4587S

Type of item: Net see-swa

Customer or operator (Town, Town council, Kindergarten, etc.):

_____

_____

Competent person in charge:

_____

_____

Installation company (address):

_____

_____

Responsible assistant (assembler):

_____

_____

Received the complete assembly instructions, maintenance instructions and maintenance printout,

(Signature of operator) (Signature of installation company)
(Stamp)

Date: _____